PHILIPS

Trafo 3122.108.30961
ook 4022.369.27261
tbv Sleumer,
Ph/Signaal
Almelo

PHILIPS

Service and operating manual

10 MHz OSCILLOSCOPE PM 3220
10 MHz OSCILLOSCOPE WITH DELAY LINE PM 3221

9499 440 05011

1/368/1/02

Contents

GENERAL INFORMATION

I. Technical data 5
II. Block diagram description 10

DIRECTIONS FOR USE AND APPLICATIONS

III. Installation 13
IV. Control elements and their functions 15
V. Operation 18
VI. Applications 21

SERVICE NOTES

VII. Circuit description 27
VIII. Gaining access to parts 36
IX. Maintenance 38
X. Adjusting elements and their functions 39
XI. Checking and adjusting 40
XII. Replacing parts 54
XIII. Assistance in fault finding 57
XIV. List of parts 59

IMPORTANT

In correspondence concerning this instrument, please quote the type number and the serial number as given on the type plate at the bottom plate of the instrument.

List of figures

1	Front view	4
2	Accessories	9
3	Block diagram	10
4	Knobs and connection terminals	14
5	Rear view	16
6	Removing the knobs	36
7	Bottom view with high voltage unit	37
8	Side view (left)	40
9	Side view (right)	41
10	Square-wave reproduction	46
11	Adjusting element at calibration socket and switches	52
12	Adjusting measuring probe PM 9326A/10	53
13	Mounting diagram of the attenuator measuring probe	55
14	Mounting diagram of the measuring probe cable	55
15	Front view with item numbers	60
16	Rear view with item numbers	61
17	Left side view with item numbers	62
18	Right side view with item numbers	62
19	Print plate U2, Y-amplifier	70
20	Circuit diagram, Y-amplifier	73
21	Switch wafers SK6	74
22	Switch wafers SK7	74
23	Time-base switch	79
24	Print plate U3, time-base generator, X amplifier, supply section	80
25	Oscillograms	82
26	Circuit diagram, time-base generator and X-amplifier	86
27	Print plate U6, X-preamplifier	87
28	Transformer T1100	88
29	Print plate U4, high voltage unit	89
30	Circuit diagram, high voltage unit	92
31	Circuit diagram, CRT circuit	92
32	Circuit diagram, supply section	95

Fig. 1. Front view

GENERAL INFORMATION

I. Technical data

The extensively transistorised PHILIPS electron-beam oscilloscopes PM 3220 and PM 3221 are identical in all respects, with the exception that the PM 3221 is equipped with a delay line.

Note: Properties expressed in numerical values with tolerances stated are guaranteed by the factory. Numerical values without tolerances stated represent the properties of an average apparatus and merely serve as a guide. The following data apply in case of nominal mains voltage, unless otherwise stated.

Cathode ray tube

Tube: – type	D13-27 GH, flat screen Screen diameter 13 cm.
– phosphor	Average persistance, green.
– useful screen area	10 × 8 cm.
– total acceleration voltage	3 kV
Unblanking	d.c. coupled
Brightness modulation (Z-MOD)	
– required voltage	20 V_{p-p} for frequencies of 10 Hz-1 MHz
– input impedance	1 MΩ//40 pF
– input RC time	10 ms
Measuring graticule	10 × 8 cm with intermediate divisions of 2 mm along the main axes. Graticule illumination in steps is possible.

Y-amplifier

Type of amplifier	d.c. amplifier
Input	
– input circuit	asymmetrical, AC-O-DC selectable

– input socket	BNC connector
– input impedance	1 MΩ//30 pF
– maximum permissible input voltage	500 V_p (d.c. voltage + a.c. voltage, also when the blocking capacitor is used).
– input RC time	0.1 sec. (in position AC).
Deflection coefficient	adjustable to 11 calibrated values, i.e.: 10, 20, 50 etc. mV/cm...20 V/cm. Tolerance: ± 3% Bandwidth: DC-10 MHz (–3 dB) Continuous (non-calibrated) adjustment between steps is possible. The sensitivity can be increased by means of a switch to: 1, 2, 5, etc. mV/cm..2 V/cm. The bandwidth is then: DC-2 MHz (–3 dB)
Rise time	35 ns or 175 ns respectively.
Overshoot	≦ 1% for pulses having a rise time ≧ 10 ns.
Magnification	Up to 3 × the useful screen height for frequencies up to 0.1 MHz The peaks of a displayed picture having maximum amplitude, can be displayed by means of the shift control.
Delay (only for PM 3221)	An effective delay of ≧ 100 ns is obtained by means of a built-in delay line
DC drift	After 10 minutes warming up, less than 2 cm per hour.
Calibration voltage	Square-wave voltage of 5 V_{p-p}, ± 1%. Frequency 8 kHz

X-amplifier

Type of amplifier	d.c. amplifier
Input	
– input circuit	asymmetrical
– input sockets	4 mm sockets

– input impedance	0.5 MΩ//30 pF
– maximum permissible input voltage	50 V_p (d.c. voltage + a.c. voltage)
Deflection coefficient	adjustable to 3 values: 1000, 500 and 200 mV/cm
Frequency response curve	0-1.5 MHz (-3 dB) at a deflection coefficient of 1 V/cm.
Deflection voltage	selectable: internal time-base voltage external voltage

Time-base generator

Time coefficient (without magnification)	Adjustable to 19 calibrated values, i.e. 0.5; 1; 2, etc. μs/cm...0.5 s/cm. Tolerance: ± 5%. In the range 0.5 s/cm: ± 10%. Continuous adjustment between the steps is possible. The time-base switch also has a position T.V. LINE (time coefficient 2-10 μs/cm; continuously adjustable) and T.V. FRAME (time coefficient 0.5-2.5 ms/cm; continuously adjustable).
Sweep expansion	1, 2 or 5 × the useful screen width. With maximum expansion, the ends of the time base line can be displayed by means of the X-shift control. The maximum time coefficient that can be obtained is 100 ns/cm
Mode of operation	Triggered. The trigger stability can be adjusted on the front of the instrument (screwdriver adjustment).
Triggering – Source	Internal or external
– Polarity	+ or –
– Mode of Operation	AC, AUT, TV LINE, TV FRAME (coupled to the time base switch.)

– Trigger sensitivity	Internal 0.5 cm 10 Hz-1 MHz, AC coupled 2 cm { 20 Hz-1 MHz, AUT 5 Hz-10 MHz, AC coupled External 1 V_{p-p} in the frequency range DC-2 MHz. Maximum permissible voltage in view of cross-talk: 12 V_{p-p}.
– Input impedance for the external trigger voltage	250 kΩ//10pF
– Trigger level	
internal	Continuously adjustable over 8 cm.
external	Continuously adjustable over 12 V_{p-p}
Time-base voltage on the output socket	8 V_{p-p}

Power supply

– Mains voltage	Adjustable for mains voltages of 110, 125, 145, 200, 220 and 245 V
– Mains frequency	40-400 Hz. At mains frequencies lower than 50 Hz, the mains voltage may not exceed the nominal value
– Power consumption	75 W

Effect of mains voltage variation of + or —10%

The deflection and time coefficients will not vary more than 4%
The calibration voltage remains constant.

Ambient temperature

The instrument operates in accordance with the tolerances at an ambient temperature between 0 and + 35 °C.
The instrument can be used at an ambient temperature between −10 °C and +45 °C.

Mechanical Data

a. Dimensions	Height : 27 cm Depth : 38 cm Width : 20 cm
b. Weight	8.5 kg

Accessories

Operating and Service Manual
Adapter PM 9051 (BNC → 4 mm)

Optional accessories available

10 : 1 attenuator probe PM 9326A/10
1 : 1 measuring probe PM 9325

Technical data PM 9326A/10

Attenuation	:	1 : 10, ± 3%
Input impedance	:	10 MΩ//8 pF
Maximum permissible input voltage	:	1000 $V_{p\text{-}p}$. Maximum permissible d.c. voltage component when the blocking capacitor is switched on: 500 V

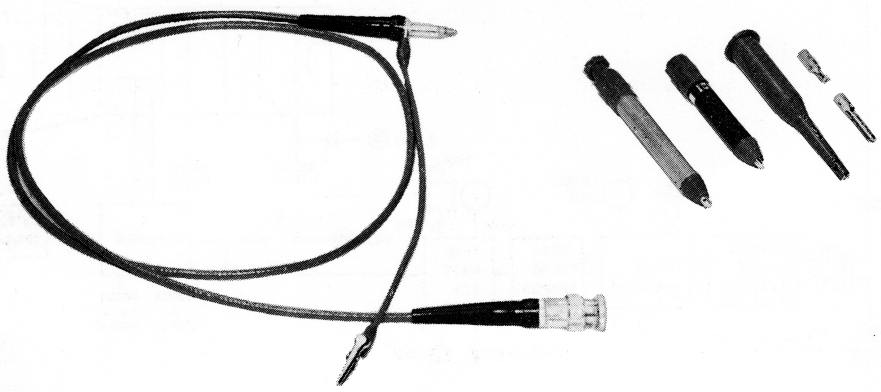

Fig. 2. Accessories

II. Block diagram description

Y-amplifier

The Y-amplifier is a d.c. amplifier consisting of:
- an input step attenuator
- a source follower input stage
- a pre-amplifier
- an output stage, delivering the deflection voltage for the picture tube.

In the PM 3221, the coupling between the pre-amplifier and the output stage has been effected via a delay line. This has been applied so as to make it possible to display the leading edge of rapid phenomena on the screen.

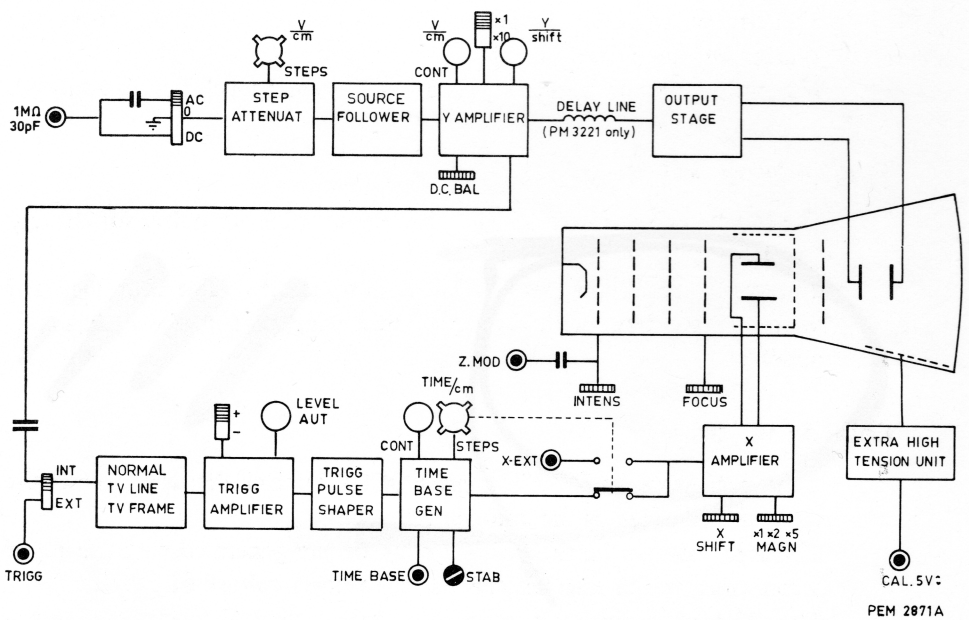

Fig. 3. Block diagram

Time-base generator

The time-base generator is of the Bootstrap integrator type.
It includes the charging capacitors and resistors which can be selected by means of knob TIME/cm. Continuous adjustment of the time coefficients is effected with potentiometer TIME/cm.
The stability of the time-base generator can be adjusted with screwdriver adjustment STAB.
The sawtooth voltage is available for external purpose on output terminal TIME BASE.

X-amplifier

The X-amplifier serves to amplify the internal sawtooth voltage or an external deflection voltage before these are applied to the X-deflection plates.
This circuit also includes the X-shift control and the magnification switch.

Trigger amplifier

The trigger amplifier amplifies the trigger signal coming from the Y-amplifier, or from an external voltage source.
The polarity of the trigger signal and the trigger level can be adjusted.

Trigger pulse shaper

The trigger pulse shaper delivers characteristic trigger pulses for starting the time-base generator.
The synchronisation separator for T.V. signals has also been included in the trigger unit, with the result that triggering at these signals is possible.

Cathode ray tube

Adjusting elements INTENS and FOCUS control the voltages on the various electrodes of the cathode ray tube.
The high voltages for the cathode ray tube are generated with the aid of a converter, which also delivers the calibration voltage of 5 $V_{p\text{-}p}$.
The Wehnelt cylinder is accessible for external Z-modulation via a connection terminal.

DIRECTIONS FOR USE AND APPLICATIONS

III. Installation

The instrument should be positioned in such way that a free air-circulation is quaranteed.
The instrument can be used either in a horizontal position or in a sloping position by means of the stand.
For temperature conditions refer to chapter I.

1. Adjusting to the local mains voltage

The oscilloscope can be adjusted to mains voltagse of 110 V, 125 V, 145 V, 200 V, 220 V and 245 V by means of the voltage adapter on the rear. The adjusted voltage can be read through the opening in the cover plate.

2. Fuse

A 1 A fuse (delayed-action) is fitted in the holder at the rear of the instrument.
When the instrument is connected to a mains voltage of less than 200 V, a 2 A fuse should be used.

3. Earthing

The instrument can be earthed via terminal ⏚ on the front or rear of the instrument, or via the mains flex if this is equipped with a plug with rim-earthing contacts.
Double earthing causes hum and should therefore be avoided.

4. Switching on

The instrument is switched on by means of switch POWER ON.
The signal lamp will then light up.

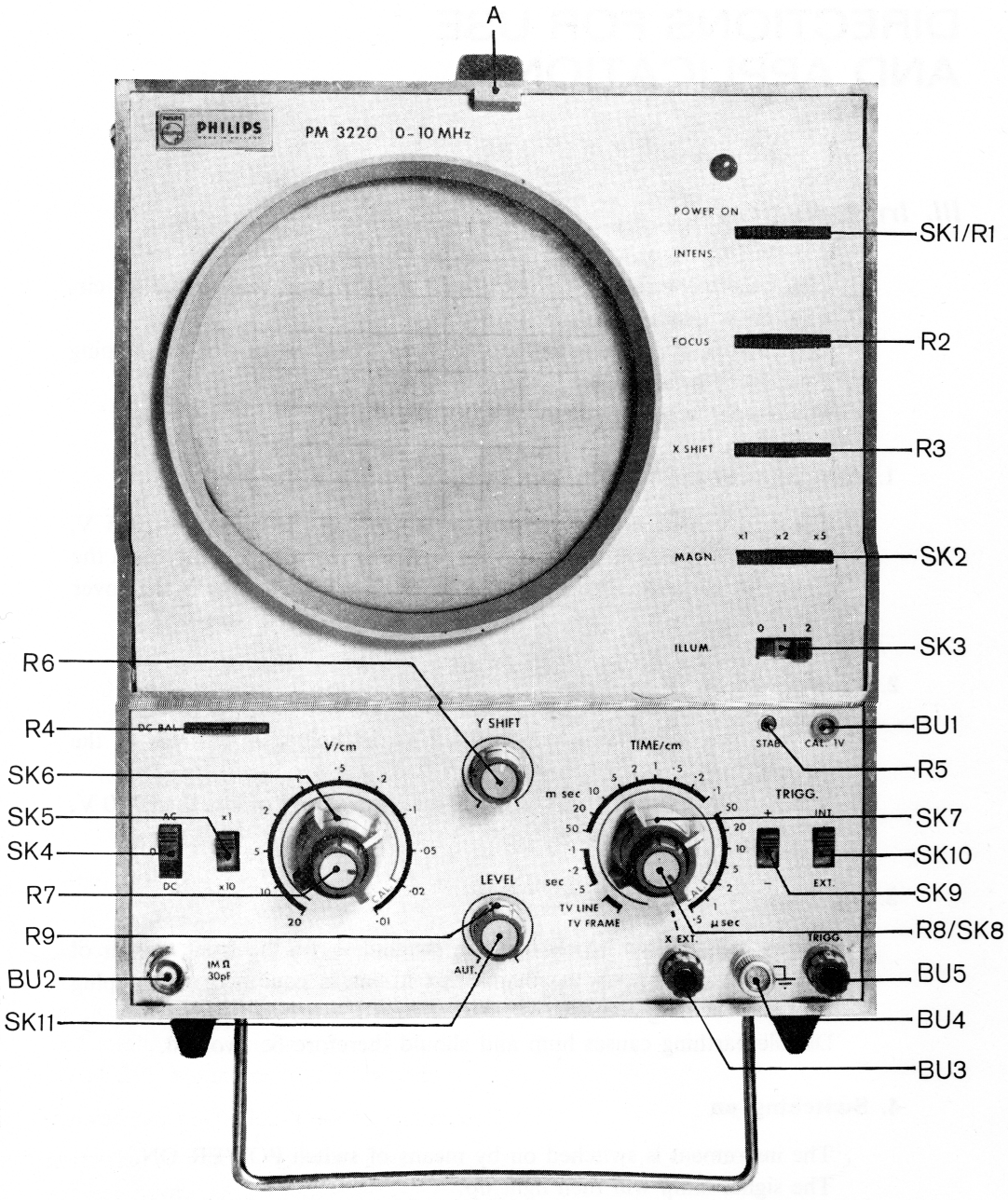

Fig. 4. Knobs and connection terminals

IV. Control elements and their functions

SK1/R1	POWER ON INTENS	Switching on and adjusting the brightness
R2	FOCUS	Adjusting the focus
R3	X-SHIFT	Horizontal shift
SK2	MAGN.	Expanding the time base length and adjusting the deflection coefficient of the X-amplifier.
SK3	ILLUM.	Step adjustment of the graticule illumination
R4	DC BAL.	Adjusting the d.c. balance of the Y-amplifier
R5	STAB.	Adjusting the trigger stability
BU1	CAL. 5 V	Square-wave calibration voltage having a frequency of 8 kHz
R6	Y-SHIFT	Vertical shift
SK4	AC-O-DC	AC: Connection between input and Y-amplifier via an isolating capacitor. O: Connection between input and Y-amplifier is interrupted. Amplifier input is earthed. DC: Direct connection between input and Y-amplifier.
SK5	×1-×10	×1: Deflection coefficients are as shown on the text plate. ×10: Deflection coefficients are 10× as small as shown on the text plate. The bandwidth is then limited to 2 MHz.
SK6	V/cm	Step control of the Y-deflection coefficients.
R7	V/cm-CAL	Continuous adjustment of the Y-deflection coefficients (in position CAL calibrated deflection).
SK7	TIME/cm	Step control of the time-coefficients.

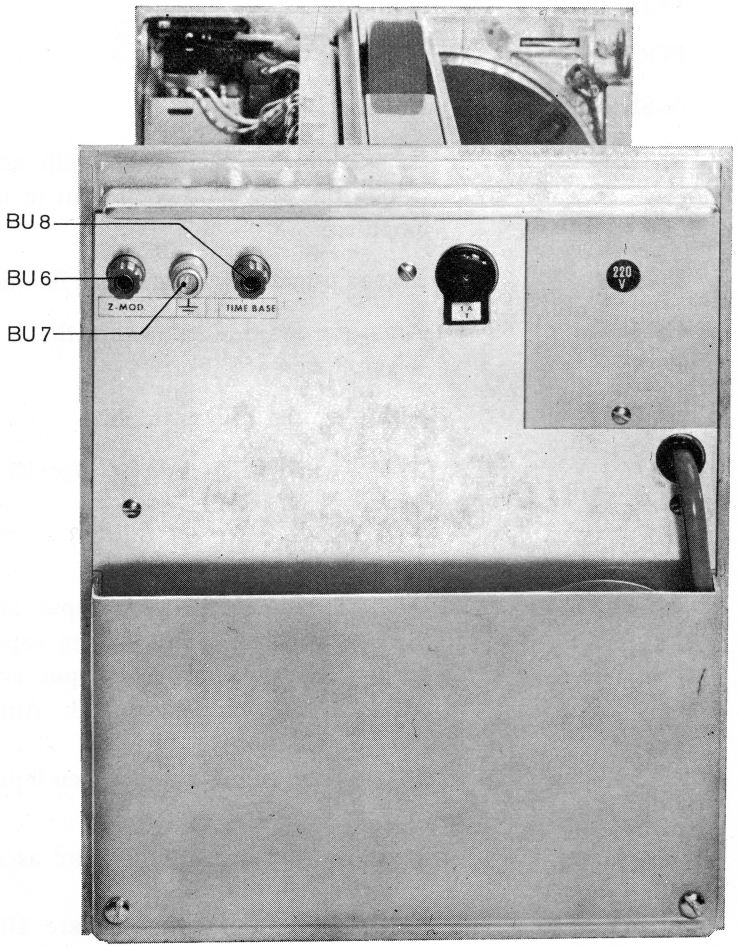

Fig. 5. Rear view

R8/SK8	TIME/cm-CAL	Continuous control of the time-coefficients (in position CAL: calibrated time coefficients).
SK9	TRIGG. +/—	Selection of triggering on positive- or negative-going edge of the trigger signal.
SK10	TRIGG. INT. EXT.	Selection of triggering on an internal voltage or on an external voltage connected to terminal TRIGG.
BU2	1 MΩ - 30 pF	Input of Y-amplifier.
R9/SK11	LEVEL-AUT	Adjustment of the trigger level (in position AUT, a stationary trace is obtained automatically).
BU3	X-EXT	Input of X-amplifier. When switch TIME/cm has been turned fully clockwise, this input can be used to obtain a horizontal deflection by means of an external voltage.
BU4	⏚	Earthing socket
BU5	TRIGG.	External trigger input.
BU6	Z-MOD	Input for brightness modulation.
BU7	⏚	Earthing socket.
BU8	TIME BASE	Output from which the sawtooth voltage, generated in the instrument, is available.

V. Operation

A. MAKING THE TRACE VISIBLE

1. Preliminary settings

a. Adjusting the time-base stability control

- Set all continuous controls (including STAB) to their mid-positions
- Set switch AC-O-DC to 0
- Set switch ×1-×10 to ×1
- Set switch MAGN to ×1
- Set switch TIME/cm to 20 msec.
- Set control LEVEL to AUT.

The trace should then be visible on the screen centre*)
If not:
- Set control INTENS fully clockwise
- Re-adjust DC BAL until the trace is in the centre of the screen

When the trace is visible:
- Re-adjust the control INTENS to prevent damage of the screen
- Set control LEVEL fully anti-clockwise short of position AUT
- Adjust control STAB to the position just anti-clockwise of that at which the trace becomes visible

The stability is then set and the trace can be made visible again either with the LEVEL control adjusted for the signal to be tested or by setting to AUT.

b. Adjusting the d.c. balance

- Make the time-base line visible on the screen
- Set the control Y-SHIFT to mid-position.
- Set switch AC-O-DC to position 0.
- Set switch ×1-×10 to position ×10.
- Set the trace to the centre of the screen by means of knob DC BAL.

*) *Check that the time base line runs parallel with the graticule. If necessary re-position the C.R.T. as described in chapter XII-A.*

– Turn the continuous attenuator control to and fro between maximum and minimum positions. At the same time, adjust control DC BAL until position variations of the continuous attenuator control no longer cause the trace to move.

Note: After the d.c. balance has been adjusted, only control Y-SHIFT should be used to obtain the desired vertical position of the trace.

c. Sensitivity Y-amplifier

– Set potentiometer V/cm to position CAL.
– Set switch V/cm to position 10 mV/cm.
– Set AC-O-DC to position DC.
– Set ×1-×10 to position ×1.
– Apply a voltage of 80 mV_{p-p}, frequency 2 kHz, to socket 1 MΩ//30 pF.
– Adjust potentiometer R73 (Fig. 8) so that the trace height is 8 cm. Tolerance at final check: +or −3%.
– Set ×1-×10 to position ×10 and decrease the input voltage by a factor 10.
– Adjust potentiometer R71 (Fig. 8) so that the trace height is 8 cm. Tolerance at final check: + or −3%.
– Check the deflection coefficient in all positions of ×1-×10 and V/cm by applying the proper voltages having a frequency of 2 kHz. The trace height should always be 8 cm, + or −3%.

d. Sensitivity X-amplifier

– Set TIME/cm to position X-EXT.
– Set MAGN to position ×1.
– Set potentiometer R713 (Fig. 9) to its mid position
– Connect socket CAL. 5 V to terminal X-EXT.
– Check that the trace width is 5 cm.
If necessary, correct with R713.

After these adjustments, fit the cabinet panels again.

2. Input circuit

The signal to be displayed should be applied to the Y-input socket. If the signal has a large d.c. component, switch AC-O-DC should be set to position AC so as to avoid the trace from lying outside the range of the Y-shift control.

To facilitate a rapid determination of the zero volts d.c. level, the input switch has been provided with position 0. In this position, the amplifier input is disconnected from the input socket and earthed.

B. INTERNAL TRIGGERING (automatic)

- Apply the signal to be tested as described in A2.
- Set TRIGG +/— to the desired polarity.
- Set knob LEVEL to position AUT.
- Adjust the trace height with switch V/cm and the relevant continuous control. (The deflection coefficient is calibrated only if the continuous control is in position CAL.)
- Adjust the time coefficient with twitch TIME/cm and the relevant continuous control. The time coefficients are calibrated only if the continuous control is in position CAL.)
- If necessary, the trace can be magnified in the X-direction with knob MAGN.

C. EXTERNAL TRIGGERING

- Apply an external trigger voltage to socket TRIGG. and set switch INT-EXT to position EXT.
- Further, proceed as for internal triggering.

D. TRIGGERING WITH MANUAL TRIGGER LEVEL CONTROL

- Set all knobs as described for A and B.
- Adjust knob LEVEL so that the time base starts at the desired level of the input signal.

E. TRIGGERING ON VIDEO SIGNALS

- Apply the voltage to be tested to the Y-input.
- Set switch +/— to position + if the signal has positive-going synchronising pulses (i.e., a negative video signal) and to the position — if the signal has negative-going synchronising pulses.
- Set switch TIME/cm to position TV LINE if triggering is to take place on the line synchronising pules and to position TV FRAME if triggering is to take place on the frame synchronising pulses.
- Adjust LEVEL for a triggered display.
- The time coefficient can be controlled with continuous control TIME/cm and switch MAGN.

F. HORIZONTAL DEFLECTION WITH AN EXTERNAL VOLTAGE

- Set switch TIME/cm to position X-EXT.
  The time-base generator is then switched off and blocked.
- The horizontal amplitude can be varied with knob MAGN.

G. BRIGHTNESS MODULATION

The voltage required for brightness modulation should be applied to socket Z-MOD. on the rear of the instrument.

VI. Applications

By means of the PM 3220 and PM 3221, qualitative and quantitative analysis can be carried out on signals as a function of the time or as a function of another signal.
In this chapter, an insight will be given in the possibilities of both instruments with the aid of some technical standards and measuring principles.

AC-O-DC switch

In position DC, the input is coupled directly to the Y-amplifier. Since no coupling capacitors are used, the complete bandwidth of the instrument is available.
This means that input signals are applied completely to the deflection plates without being disorted. This implies that d.c. voltages on the input are displayed on the screen as trace shift.
This may give rise to difficulties when signals are to be displayed which are superimposed on high d.c. voltages. In order to be able to display the a.c. signal in those cases, a strong attenuation would be required, with the result that the a.c. signal would also be attenuated. Position AC has been provided to prevent this.
In this position, a blocking capacitor is connected between the input and the Y-amplifier, with the result that only the a.c. component is applied to the amplifier.
However, as a result of this, not only the d.c. voltage but also the lower frequencies (up to approximately 10 Hz) of the a.c. voltage signal will be suppressed or attenuated.
When square-wave-voltages having low frequencies are displayed, this will result in some pulse droop.
In position O of the AC-O-DC switch, the connection between the input and the Y-amplifier is interrupted and the amplifier input is earthed. In this position, the d.c. balance of the amplifier can be adjusted. This serves to adjust the operating range of the amplifier symmetrically around the earthing level.
It is thus obtained that a signal on the screen can be shifted upward as much as downward and also that the peaks of a magnified signal can be displayed within the screen without being distorted. The d.c. balance is adjusted as described in point V.A. 1b.

Measuring probes

For judging the measuring result, it is of importance to take into account the effect of the input impedance of the oscilloscope on the circuit under test. This impedance, forming a load for the signal source, can in some cases actually influence the voltage to be measured.
At higher frequencies, the input impedance in general is determined by the input capacitance.
When measuring on tuned circuits, it should also be taken into account that the input capacitance may cause detuning.
The load capacitance can be strongly reduced by using a 1 : 10 attenuator probe. By means of this probe, the ohmic as well as the capacitive load is reduced by approximately a factor 10.
Moreover, the use of an attenuator probe offers the advantage that the lowest frequency is reduced by approximately a factor 10 in case of a.c. coupling.
The deflection coefficients of the Y-amplifier also become 10× larger, so that it is possible to display signals having a very high amplitude. However, the maximum permissible voltage on the measuring probe may not be exceeded.

Effect of the impedance of the oscilloscope on the measuring object.

Measuring object	*Impedance of Y-input*	*Effect of input resistance*	*Effect of input capacitance*
5 kΩ//30 pF	1 MΩ//30 pF	Negligible	Large, especially at high frequencies
1 MΩ//0.01 μF	1 MΩ//30 pF	Large (measuring error approx. 50%)	Negligible

Parasitic phenomena

At frequencies higher than some hundreds of kHz, capacitances and selfinductances of cables may start having an effect. Moreover, the measuring set-up will be more sensitive to interference fields on account of the lower voltage values usually prevailing at these frequencies. When measuring on voltage sources having a high internal resistance and a low terminal voltage, it is therefore recommended to measure, if possible, via an attenuator probe or via a 1 : 1 measuring probe or screened cable. Especially avoid double earthing: in the loop thus formed, hum voltages may be introduced.

Voltage measurements

- When measuring voltages, take into account that an oscilloscope does not indicate the r.m.s. value of the voltage (as most valve voltmeters do) but the peak to peak value. Relation $V_{rms} = \frac{V_{p\text{-}p}}{2\sqrt{2}} = \frac{V_{p\text{-}p}}{2.82}$ applies in case of purely sinusoidal signals.
- The measuring accuracy of ± 3% applies to the flat part of the amplitude frequency response curve. To ensure a proper square-wave reproduction, the amplitude frequency response curve of every good oscilloscope amplifier starts dropping at approximately one third of the bandwidth.
  This should be taken into account when determining the accuracy of the measurement.

Triggering

If a periodic signal is to be displayed, it is necessary that the X-deflection always starts at a certain point of the wave form. This is to obtain a stationary trace.
The starter of the X-deflection is the trigger unit which is controlled by a signal derived from the Y-input signal. Each time the input signal passes a certain level of the wave form in positive or in negative direction, the trigger unit supplies a pulse starting the time-base generator. From this it follows that the X-deflection starts when the input signal passes through that level (the trigger level) of its wave form, with the result that a stationary trace is obtained.

Automatic triggering

The automatic triggering is most often used on account of its simple operation. In this position it is possible to display a large number of wave forms having different amplitude and shape without it being necessary to operate any of the trigger controls.
If no trigger signal is present, a time base line remains visible on the screen which is useful for reference purposes.
With this trigger mode, the trigger level is adjusted automatically to the average value of the trigger signal.
By means of the + / — switch, triggering can be adjusted to the positive-going or negative-going edge of the input signal.
The automatic trigger position can be used for practically any signal.

Trigger level

In case of complicated signals in which a number of non-identical voltage shapes occur periodically, the time axis should always be started with the same voltage shape so as to obtain a stationary trace.
This is possible when one of the details has a deviating amplitude.
By means of knob LEVEL, the trigger level can then be adjusted so that only this larger voltage variation passes this level.
Also in the case of observing a leading edge (with PM 3221) it is useful to use the LEVEL setting.
The trigger level can then be adjusted so that the time base is started already at the beginning of this leading edge.

External triggering

External triggering is applied for signals having a strongly varying amplitude, if a signal having a fixed amplitude and equal frequency is present.
This removes the necessity of readjusting the level control at every variation of the input signal.

TV LINE and TV FRAME

To simplify triggering on television signals, a synchronisation seperator is switched on in the two TV positions of the time-base switch. This separates the synchronising pulses from the trigger signal. The line and frame synchronising pulses are separated from each other by an integrator.
In position TV LINE, the line pulse is used to start the time-base generator. In position TV FRAME, the frame pulse is used to do this. In these positions, the time coefficient of the time-base generator can be adjusted with continuous control TIME/cm.
As is known, the synchronising signals have a polarity opposite to that of the video signal.
When triggering is to take place on a positive video signal, the trigger polarity switch should therefore be in position −. For a negative video signal, it should be in position +.

Delay line

The input signal is also used to trigger the time-base generator. For this, the signal is applied to the trigger unit which converts it into trigger

pulses. However, it does require some time for the trigger unit to start the X-deflection.
During this time, the first part of the input signal that has already reached the deflection plates, may already have passed completely or in part. This implies that a steep leading edge will not be displayed on the screen. To avoid this, a delay line has been incorporated in the Y-amplifier of the PM 3221. The trigger signal is taken off between the input and the delay line.
If the delay time of the line is selected slightly longer than the time required by the trigger unit to start the X-deflection, the time base will start running before the leading edge of the input signal has reached the deflection plates. Consequently, the leading edge will also be displayed on the screen. For triggering, it is recommended to use the level setting because in that case the time base can ba started at any desired point of the leading edge. In this way, full benefit is derived from the advantages of the delay line.

Hints for measuring rise times

- The rise time is defined as the time required by the rising edge of a signal to rise from 10% of its peak value to 90% of its peak value.
- Due to the delay line it is also possible in the PM 3221 to measure the rise time of pulses having a low repetition frequency.
- If the rise time of the oscilloscope is approximately that of the object to be measured, it should be calculated in accordance to the following equation:

$$Tw = \sqrt{T^2m - T^2o}$$

in which: Tw = actual rise time
Tm = rise time measured
To = rise time of the oscilloscope

External X-deflection

The time-base generator is switched off when the time-base switch is turned fully clockwise. X-deflection can then be obtained by applying an external signal to the X-input.
In this way the oscilloscope can be used to some extent as an X-Y oscilloscope. The limitation is formed by the fact that the X and Y-amplifiers are not identical and that therefore phase differences will raise between the X and Y channels at higher frequencies.

Brightness modulation

To insert additional information into the oscillogram, the trace can be brightness modulated by means of external voltage.
This can be obtained by applying the external signal to socket Z-MOD on the rear of the instrument.
In this way very accurate time measurements can be carried out in the oscillogram if the brightness is modulated with time markers. The measurements can then be carried out directly with the aid of the time markers in the picture.

Photographing oscillograms

With the aid of PHILIPS photographic equipment PM 9300, photographs can be taken of oscillograms.
The PM 9300 includes, amongst others, a Rolleicord camera, a Polaroid Land cassette and various adaptors for oscilloscopes having various screen diameters. The 13 cm adapter can be mounted on the PM 3220 or PM 3221 after removing the upper text plate. For further details concerning recording materials, exposures, time coefficients, etc., please consult PHILIPS publication: PHOTOGRAPHIC RECORDING.

SERVICE NOTES

VII. Circuit description

A. Y-AMPLIFIER (Fig. 20)

The Y-amplifier is a d.c.amplifier consisting of four sections, i.e.:
- an input attenuator
- an input stage consisting of source followers TS14-TS15
- a pre-amplifier formed by the push/pull-connected amplifier stages TS1-TS3 and TS9-TS11 and the six emitter followers TS6, TS7, TS8, TS10, TS12 and TS13.
- an output amplifier consisting of push/pull amplifier B2′-B3′ and cathode followers B2″ and B3″.

1. Input attenuator

The deflection coefficient of the amplifier can be increased by switching on a high-ohmic attenuator in the input circuit. This attenuator consists of five sections providing an attenuation of:

10 × (R16-R17)
100 × (R18-R19)
1000 × (R21-R22)
2 × (R24-R26)
5 × (R27-R28)

By means of switch SK6 the attenuator sections can be combined so that eleven deflection coefficients can be selected. These sections are frequency compensated by means of trimmers C19, C24, C29, C32, C34, C36 and C38. Trimmers C18, C23 and C28 have been adjusted so that the input capacitance is the same in all attenuator positions. By means of switch SK4, the input socket BU2 can be connected directly (DC) or via an isolating capacitor (AC) to the attenuator. In position 0 of switch SK4, the input of the Y-amplifier is earthed and the connection with BU2 is cut off. In this position the zero level of the amplifier can be checked.

2. Input stage

To obtain a high input impedance of the amplifier, a source follower stage has been used (TS14).
The d.c. drift of the amplifier has been reduced by sources follower TS15 because variations in the d.c. levels on the sources of TS14 and TS15 neutralise each other.
The d.c. voltage on the gate of TS15 (adjustable by means of R4, DC-BAL.) serves to equalise the emitter d.c. voltages of TS1 and TS2 when no input signal is connected. Now there will not be a d.c. voltage across the continuous amplification control R7, with the result that it is prevented that the time-base line is shifted across the screen when R7 is turned.

3. Pre-amplifier

The first part of the pre-amplifier is formed by a "Cherry and Hooper" circuit with transistors TS1-TS3 and TS2-TS4.
The "Cherry and Hooper" circuit is an amplifier circuit with current and voltage feedback. The current feedback, obtained by means of the resistors in the emitter circuit of TS1 and TS2, provides the circuit with a high input impedance. The voltage feedback, effected by resistors R52 and R57, provides the circuits with a low output impedance.
The circuit offers the advantage of a large bandwidth which is due to, amongst others, the fact that the feedback capacitance of the first transistor almost has no effect.
The amplification is determined mainly by resistors R52 and R57 and the emitter resistor of TS1 and TS2. This resistance and therefore the amplification, can be varied continuously by means of R7.
Capacitor C48 in the emitter circuit renders the feedback dependent from the frequency which benefits the higher frequencies. Resistor R49 prevents distortion in case of deflection up to three times the screen height.
The trace can be shifted across the screen in the vertical direction by means of potentiometer R6 which controls the d.c. potentials on junctions R52-R53 and R54-R57.
The "Cherry and Hooper" circuit is followed by an impedance transformer consisting of emitter followers TS6 and TS7 and which serves to match the input impedance of the push-pull circuit TS9-TS11 to the output impedance of the preceding circuit. Potentiometer R73 is used to adjust the sensitivity of the Y-amplifier.

Switch SK5 is included in push/pull stage TS9-TS11. By means of this switch, the circuit with potentiometer R71 can be connected in parallel to the emitter resistors of TS9 and TS11. As a result, the amplification of this stage will increase by a factor 10. Due to this the input sensitivity of the Y-amplifier becomes 10 × as large in all positions of the step attenuator.
The control range of potentiometer R6 (Y-SHIFT) is adapted to this higher amplification by connecting resistor R58 in parallel to it.
The trigger signal is also taken from this stage and applied, via emitter followers TS8 and TS10, to the trigger amplifier.
In the PM 3220, push/pull circuit TS9-TS11 is connected to the output amplifier via emitter followers TS12 and TS13.
In the PM 3221, this coupling is effected via a delay line and emitter followers TS12 and TS13.
This delay line has been incorporated so as to enable the display of the leading edge of fast phenomena on the screen. Network R74-C49 compensates for the cable losses. Networks L1-R81 and L2-R92 serve for the proper termination of the delay line.
Emitter followers TS12 and TS13 serve to reduce the effect of the input capacitance of B2′ and B3′ on push/pull amplifier TS9-TS11.

4. Output amplifier

In view of the high voltages required for the deflection of an electron beam, electron valves have been applied in the output amplifier.
Push/pull amplifier B2′-B3′ is driven symmetrically and is connected to the Y-deflection plates of the cathode ray tube via cathode followers B2″ and B3″. Both cathode followers serve to reduce the effect of the capacitances of the deflection plates on the anode circuits of B2′ and B3′.
Valves B2″ and B3″ are protected against positive grid voltages, occurring immediately after the instrument is switched on, by diodes GR3 and GR4.

B. TIME-BASE GENERATOR (Fig. 26)

This consist of o Bootstrap integrator (TS509) controlled by a Schmitt trigger (TS506-TS507). For the description of its working, the following initial condition of the Schmitt trigger is assumed.
TS506 not conductive
TS507 conductive

The collector voltage of TS507 and with it the base voltage of TS508, will then be only slightly negative, so that TS508 carries little current. Consequently, the emitter potential of TS509 is little negative also. As a result of this, diode GR502 is conductive, so that the emitter level of TS508 also determines the base level of TS509.
This level has been selected so that Bootstrap integrator TS509 is blocked. If a negative pulse is then applied to the base of TS506, the Schmitt trigger will reverse to condition:
TS506 conductive
TS507 not conductive
The collector voltage of TS507 and with it the base voltage of TS508, will then be strongly negative, so that TS508 carries much current.
As a result, the emitter potential of TS508 is also low.
Due to this, diode GR502 is blocked, with the result that the blocking of the Bootstrap integrator is eliminated.
The time-base capacitor C1 (C528...C537) is then charged at a constant current, so that a linearly increasing negative-going voltage arises across this capacitor.
This voltage is returned to Schmitt trigger TS506-TS507 via emitter follower TS511, phase inverter TS512 and emitter follower TS513. The Schmitt trigger will reverse to condition:
TS506 not conductive
TS507 conductive
when the linearly increasing voltage has attained a certain level.
As a result, the Bootstrap integrator is blocked again until the next trigger pulse appears.
The constant charging current is obtained by means of feedback in the Bootstrap integrator, with the result that the voltage across R536+R8+R1 (= R591, R593, R594, R596, R597 respectively) is kept constant.
This feedback is effected via TS511 and GR503.
Emitter follower TS511 ensures a high impedance on the base of TS509. The base current of TS509, which is not constant, will therefore be small with respect to the charging current of the time-base capacitors. As a result, a very good linearity of the sawtooth voltage is obtained.
The charging current of the time-base capacitor and with it the time coefficient, can be adjusted accurately by means of R536.
The stability of the time-base generator can be controlled with potentiometer R5 (STAB.). This potentiometer determines the value of the d.c.

voltage on the base of TS506. This d.c. voltage is selected so that the negative pulse, arising at the base of TS506 at the end of the flyback, cannot reverse the Schmitt trigger.

In the feedback circuit, in the collector lead of the phase inverter stage TS512, amplitude control R546 is included.

The feedback circuit also includes hold off capacitors Cho (C538... C546) which ensure that the time-base capacitors can be discharged completely after the scan. Consequently, the sawtooth voltage always starts at the same level.

By means of switch SK7, twenty-one different time coefficients can be selected by switching on various capacitors and charging resistors. The charging voltage and consequently the time coefficient, can be varied continuously with R8.

In positions TV LINE and TV FRAME, the control range of R8 has been increased from 1 : 3 to 1 : 5 with the aid of R541. The time coefficient is calibrated when R8 is turned clockwise.

The sawtooth voltage is taken from the emitter of TS511 and applied to the X-amplifier (via SK7-IV-A) and to output terminal BU8 (TIME BASE).

C. BEAM DEFLECTION (Fig. 26)

To make sure that the electron beam is not displayed on the screen during the flyback, such a voltage is applied to g3 of the cathode ray tube that blanking occurs.

The voltage required for this is delivered by the bi-stable multivibrator TS518-TS519 and it is applied to the cathode ray tube via emitter follower TS520.

The moment at which this multivibrator switches is determined by the positive voltage transient occurring on the emitter of TS505 during the flyback.

On account of this voltage transient, the multivibrator assumes the position:

TS519 not conductive

TS518 conductive

The collector voltage of TS518 is therefore low and also the output voltage of TS520. The voltage difference between electrodes g2 and g3 of the cathode ray tube is then large.

As a result, the desired beam deflection occurs.

At the beginning of the scan of the sawtooth voltage, the negative voltage

transient occurring on the emitter of TS505 will reverse the multivibrator to position:
TS519 conductive
TS518 not conductive
The voltage difference between g2 and g3 of the cathode ray tube then decreases to zero volts and the electron beam will be displayed again.

D. TRIGGER PULSE SHAPER

This consists of the following sections:
– an emitter follower (TS500)
– an amplifier stage (TS501-TS502)
– a Schmitt trigger (TS503-TS504)
– a synchronisation separator (TS514)
The trigger signal can be taken, at option, from the Y-amplifier or from an external source.

– Emitter follower

This emitter follower brings the input of the trigger amplifier on a zero volts level. Zener diode GR504 serves to bias transistor TS500 and GR505 and GR506 to bias TS 501.

– Amplifier stage

This is an emitter coupled push/pull amplifier. The trigger signal is applied to the base of TS501 via capacitor C502. As a result, voltages having the same amplitude but being counter-phased, arise on the collectors of TS501 and TS502. By selecting one of these voltages with switch SK9 (+/–), it is possible to trigger on the positive-going or on the negative-going edge of the signal.
The d.c. voltage on the base of TS502 can be continuously adjusted by means of potentionmeter R9 (LEVEL).
Depending on this setting, since the amplifier is overdriven, a different part of teh signal is amplified each time. The trigger level is therefore determined by the position of R9.

– Schmitt trigger

Switch SK11 closed (position LEVEL).
The amplified trigger signal reverses Schmitt trigger TS503-TS504. In case of a repetitious trigegr signal, a square-wave voltage having a constant amplitude then arises on the collector of TS504.

This voltage is differentiated to positive and negative spikes by C507 and R522. The positive pulses are short-circuited by diode GR501. The negative pulses are applied to the time-base generator.
Switch SK11 open (position AUT).
In this position of SK11, capacitor C504 is included in the base circuit of TS503. As a result, the Schmitt trigger is circuited as an astable multivibrator, with the result that a periodic LF square-wave voltage arises on the collector of TS504. The time-base generator will therefore be started normally without a trigger signal being applied to the trigger pulse shaper.
If there is a trigger signal present, the astable multivibrator will be synchronised by this voltage and it will deliver trigger pulses in the rhythm of the input voltage.

– **Synchronisation separator**

In positions TV LINE and TV FRAME of switch SK7, synchronisation separator TS514 is switched on. As a result, it is possible to trigger on the line and frame synchronising pulses of a television signal.
The video signal is applied to sychronisation separator TS514 which is set so that peak detection is effected by the base emitter diode and only the peaks of the synchronising pulses will fall in the range of operation.
The line and frame synchronising pulses are separated from each other by integrator R562-C516.
In position TV LINE, the line synchronising pulses are applied to Schmitt trigger TS503-TS504 and in position TV FRAME, the frame synchronising pulses.

E. X-AMPLIFIER (Fig. 26)

This amplifier consists of a pre-emplifier TS601...TS603 and a final amplifier B701-B702.
The pre-amplifier comprises an emitter follower TS601 which brings the input of the X-amplifier on zero potential, and the push-pull amplifier TS602-TS603. The feetback, of the latter can be adjusted in three steps by means of switch MAGN (SK2), so that three different deflection coefficients are obtained. With X-SHIFT (R3) the d.c. potential at the base of TS602 can be varied which results in a trace shift in horizontal direction.

The final stage is a push-pull amplifier consisting of valves B701 and B702. The feedback of this amplifier and therefor the deflection sensitivity in horizontal direction, can be adjusted with R713.
In position X-EXT of SK7, the connection between the time-base generator and the X-amplifier is cut off.
It is then possible to apply an external signal to the X-amplifier via connection terminal BU3.
To prevent cross-talk of the time-base voltage on the X-amplifier, the time-base generator is switched off in this position of SK7 by applying a negative voltage to Schmitt triggers TS506-TS507 and TS503-TS504. Moreover, a negative voltage is applied to the base of TS518 so that the beam deflection multivibrator always is in condition: TS518 not conductive, TS519 conductive, so that unblanking is ensured.

F. CATHODE RAY TUBE CIRCUIT (Fig. 30)

The intensity of the trace van be controlled with potentiometer R1 (INTENS). The control range is determined by choise resistors R308 and R309. The intensity voltage is stabilised by valves B302 and B303.
Focusing is effected with potentiometer R2 (FOCUS) while the astigmatism of the electrostatic lens can be corrected with R312.
Barrel and cushion distortion can be corrected with potentiometer R313.
With switch SK3 (ILLUM), the graticule illumination can be adjusted in three steps.
Via socket BU6 (Z-MOD), the picture can be brightness modulated.

G. SUPPLY SECTION (Fig. 31)

– 16 V

The a.c. voltage across winding S2 of the supply transformer is full-wave rectified and subsequently stabilised electronically. This is effected by comparing a voltage proportional to the output voltage, via a difference amplifier (TS1003-TS1004) to a reference voltage (GR1011). Any difference is amplified and fed back via a series regulator (TS 1001). Emitter follower TS1002 ensures current amplification between the difference amplifier and the series regulator.
The output voltage can be coarsely adjusted with R1016 and fine adjusted with R1018.
The ripple voltage present on the output is fed back via C1007. By

means of R1014, the value of the fed back voltage can be adjusted and the ripple voltage can thus be adjusted to minimum.

– 95 V

To obtain this voltage, the a.c. voltage on winding S4 of the supply transformer is full-wave rectified and smoothed.

+ 95 V and + 205 V

The a.c. voltage across winding S3 is full-wave rectified and then stabilised electronically at + 95 V. This is effected in a similar way as was the case with the – 16 V voltage.
The reference voltage is delivered by valve B1002 while a single amplifier stage (B1001) is applied as a comparison stage.
The output voltage can be adjusted with R1011. The ripple voltage is fed back via C1002 and can be adjusted to minimum by means of R1004. Via smoothing filter R1002-C1003, the voltage of +200 V is taken off.

Post-acceleration and calibration voltage (Fig. 29)

This voltage is generated with an oscillator formed by transistor TS1101 and the primary of the high voltage transformer. Across the secondary, a high a.c. voltage arises which is rectified to + and – 1500 V by means of diodes GR1101...GR1104.
The calibration voltage is also obtained from the primary of the transformer.
The calibration voltage is kept constant by Zener diode GR1106 and adjusted to exactly 5 $V_{p\text{-}p}$ with choice resistor R1107.

VIII. Gaining access to the parts

Caution

Very high voltages are generated in this instrument so that great care must be taken when carrying out work inside the instrument.

A. REMOVING THE SIDE PANELS

The apparatus has one plate on each side, each fixed by means of two quick fasteners SB (Fig. 15). Loosen these fasteners and remove the panels from the frame.

B. REMOVING THE KNOBS (Fig. 6)

Single knobs

- Remove cap A.
- Loosen screw B.
- Pull the knob off the spindle.

Double knobs

- Remove cap A.
- Remove screw B.
- Remove the inner knob.
- Loosen nut C.
- Pull the outer knob off the spindle.

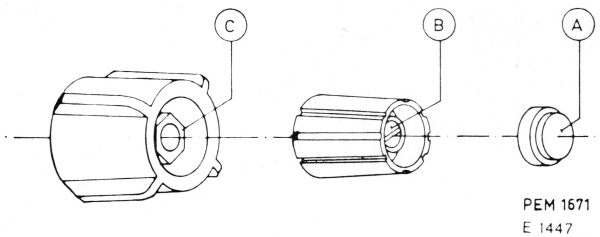

Fig. 6. Removing the knobs

C. REMOVING THE BEZEL, TEXT PLATE, GRATICULE AND CONTRAST PLATE

– Press pin A (Fig. 4) upwards.
– The text plate and the bezel can then be taken out of the frame. The graticule and the contrast plate are then accessible.

D. GAINING ACCESS TO THE HIGH VOLTAGE UNIT (Fig. 7)

– Place the instrument on its side.
– Loosen screw S a few turns.
– Slide the small bottom plate out of the instrument.

The high voltage unit can then be slid out for servicing (take care that the connection wires are not damaged), so that measurements can be carried out while the instrument is switched on.

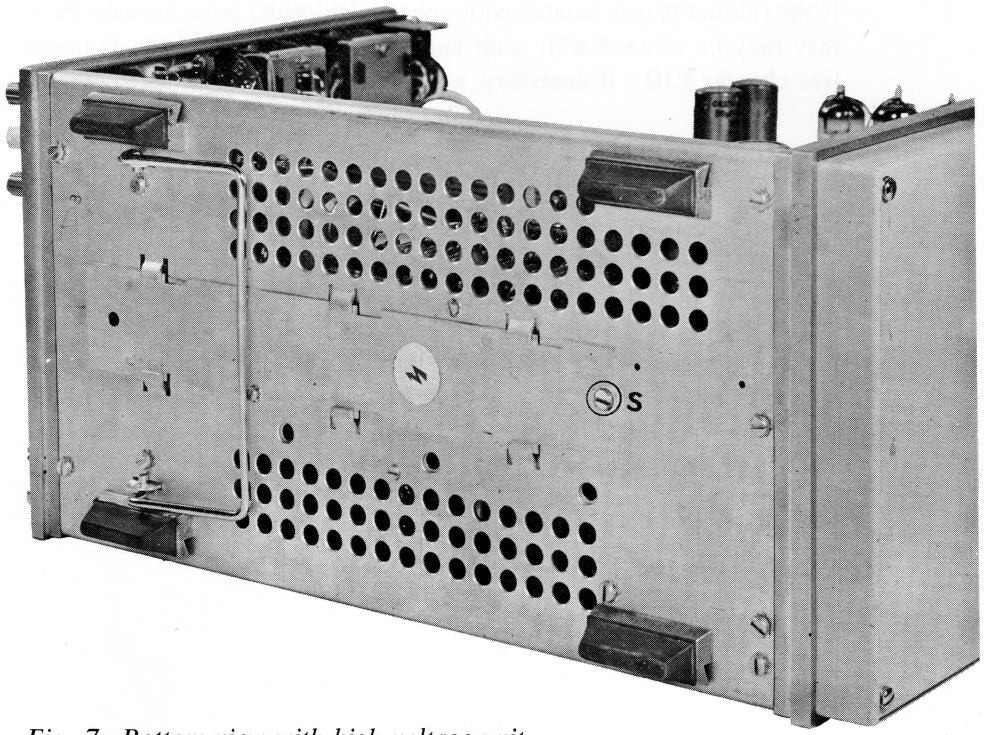

Fig. 7. Bottom view with high voltage unit

IX. Maintenance

– Segment switches

Should these switches no longer function properly on account of soiling, they may be treated with switch oil (see MECHANICAL PARTS, chapter XIV). This oil has cleaning and lubricating properties.
After treatment with this oil, set the switch to all its positions a few times.

ATTENTION

The third wafer of the attenuator switch is made of a special insulating material. Therefor only acid-free vaseline should be used to clean the contacts of this switch.

– Cabinet panels

If the cabinet panels (coated with polyvinylchloride) have become dirty, they may be cleaned with soap and water after having been removed (see chapter VIII); if necessary, a scouring agent may be used.

X. Adjusting elements and their functions

The order given below is arbitrary. For the complete adjusting procedure, the order of chapter XI is recommended.

Adjustment	*Element*	*Fig*	*Measuring instrument*	*Recommended PHILIPS type*	*Chapter XI point*
Supply					
1. —16 V	R1016, R1018	9	d. c. valve	PM 2401	B
ripple	R1014	9	voltmeter		
2. +95 V	R1011	9	oscilloscope	PM 3221	B
ripple	R1004	9	variable transformer	E401AB/010	
Cathode ray tube circuit					
1. intensity	R308, R309	9	—	—	C1
2. barrel and cushion distortion	R313	9	—	—	C2
3. focus and astigmatism	R307, R312	9	—	—	C3
Y-amplifier					
1. d.c. balance	R20, R55	8	—	—	D1
2. sensitivity	R71, R73	8	L.F. generator variable transformer	PM 5120 E401AB/010	D2
3. square-wave response			square-wave generator	PM 5710	D4
for PM3220 only	C47	8			
for PM3221 only	C49, R74	8			
for both types	C18, 19, 23, 24 28, 29, 32, 34, 36, 38, 48, R80	8			
Calibration voltage	R1107	11	Calibrated oscilloscope	PM 3221	E
X-Amplifier					
1. Sensitivity	R600, R713, C525	9, 11	L.F. generator	PM 5120	F1
2. Square-wave response	C702	9	square-wave generator	PM 5710	F2
Time-base generator					
1. stability	R5, R510, R515	9	R.F. generator	PM 5300	G1
2. time coefficients	R536, 546, 595	9	L.F. generator	PM 5120	G3
	C548	11			
3. beam deflection	R585	9	—	—	G5

XI. Checking and adjusting

A. GENERAL INFORMATION

The tolerances given below are factory tolerances which apply only when the instrument is readjusted.
They may deviate from the data given under I.
All adjusting elements, their functions and their positions, are given in the table of chapter X.

B. SUPPLY

Mains current

Check that the mains voltage adapter is set to 220 V and connect the instrument to this voltage (50 Hz).
The current taken from the mains may not exceed 430 mA. (to be measured with a moving iron meter).

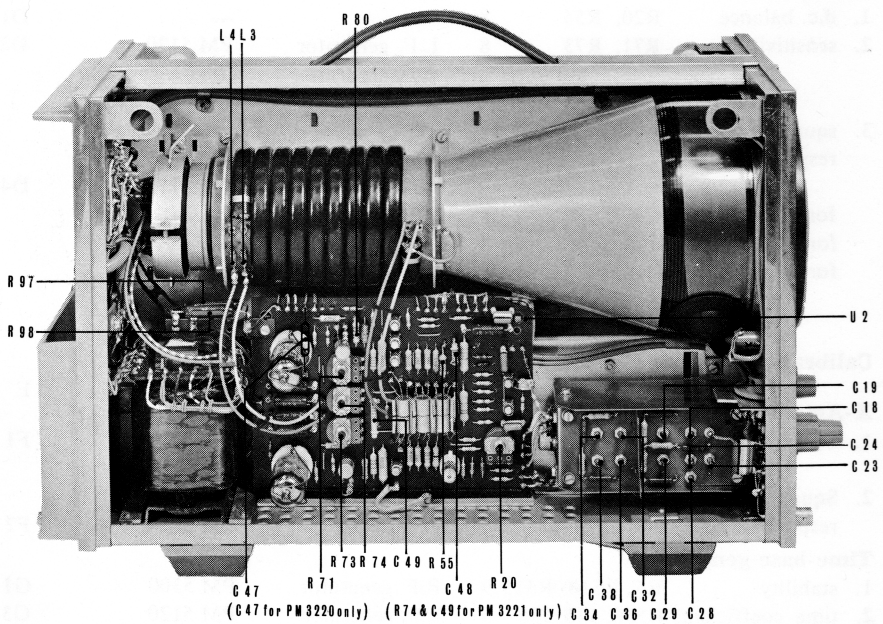

Fig. 8. Side view (left)

—16 V

- Set switch TIME/cm (SK7) to position X-EXT.
- Measure the voltage on the collector of TS1004.
  This should be —16 V. If this is not so, it is possible to adjust to exactly — 16 V by means of potentiometer R1018.
  If necessary, select a different value for R1016.
- By means of R1014, adjust the ripple voltage on the —16 V d.c. voltage to minimum.
- Vary the a.c. voltage to which the instrument is connected between 198 and 242 V with the aid of a variable transformer.
  The —16 V d.c. voltage may not vary more than 100 mV.
  The ripple voltage may not exceed 10 $mV_{p\text{-}p}$.

+95 V

- Measure the voltage on junction R1004/R1008.
  This should be +95 V, + or —1 V. If necessary, select a different value for R1011.

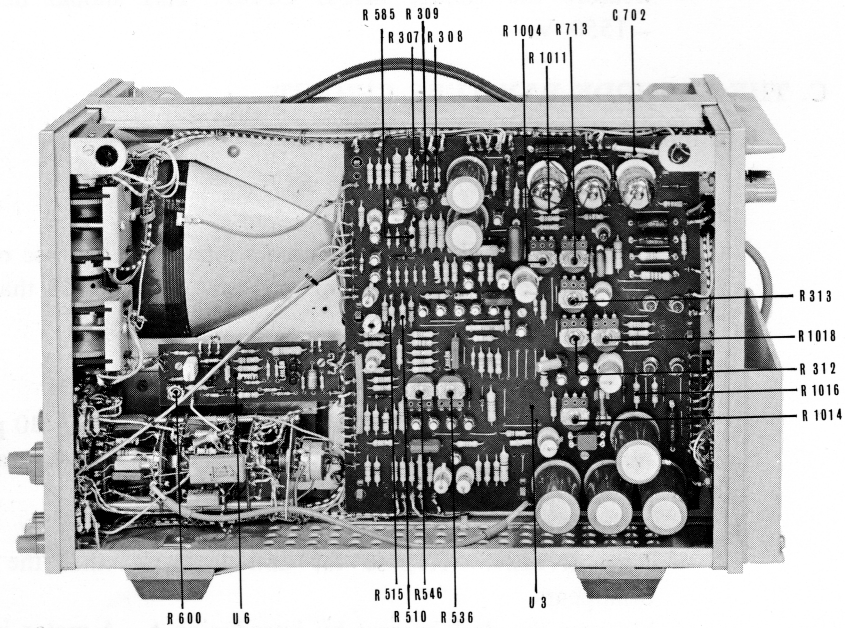

Fig. 9. Side view (right)

– Adjust for minimum ripple voltage by means of R1004.
– By means of a variable transformer, vary the a.c. voltage to which the instrument is connected between 198 V and 242 V.
The +95 V d.c. voltage may not vary more than 150 mV.
The ripple may not exceed 30 mV_{p-p}.

—95 V and +205 V

– Measure the voltage across C1006
This should be −95 V, + or −5 V.
– Measure the ripple voltage across C1006. This may not exceed 0.2 V_{p-p}.
– Measure the voltage across C1003.
This should be 205 V, + or −10 V.
– Measure the ripple voltage across C1003. This may not exceed 2 V_{p-p}.

High voltage

– Measure the voltage across C1108. This should be +1450... +1550 V.
– Measure the voltage across C1107. This should be −1450... −1550 V.

C. THE CATHODE RAY TUBE CIRCUIT

1. Intensity

– Set LEVEL (R9) to position AUT.
– Set TIME/cm (SK7) to position 1 msec/cm.
– Turn INTENS (R1) from minimum intensity clockwise over a third of its control range and select such a value for R308 that a trace is just displayed.
– Turn INTENS (R1) clockwise.
– Set TIME/cm (SK7) to position X-EXT.
– Connect socket CAL. 5 V (BU1) to terminal 1 MΩ//30 pF (BU2).
– With X-SHIFT (R3) and Y-SHIFT (R6) position the trace symmetrically with respect to the Y-axis and the X-axis.
– Adjust FOCUS (R2) for a sharp trace.
– Turn INTENS (R1) so far anti-clockwise, that the trace just disappears.
– Measure the dark-current by introducing a μA-meter in the post-acceleration lead.

- Turn INTENS (R1) clockwise and select such a value for R309 that the current change, indicated by the μA-meter, is 10 μA.
- Repeat both adjustmens.

2. Barrel and cushion distortion

- Set TIME/cm (SK7) to position X-EXT.
- Apply such a voltage to socket 1 MΩ//30 pF (BU2) that a vertical line with a height of 8 cm is obtained.
- At the left and right extreme of the graticule adjust potentiometer R313 so, that the line is as straight as possible.
- Apply voltages having frequencies of 50 Hz and 10 kHz to inputs 1 MΩ//30 pF (BU2) and X-EXT (BU3) respectively.
- Check that no point of an image whose extreme points just touch the sides of a square of 10 × 6 cm, lies inside a concentric square of 9.7 × 5.8 cm.

3. Focus and astigmatism

- Set TIME/cm (SK7) to 0.5 msec.
- Apply a 2 kHz sine-wave voltage to socket 1 MΩ//30 pF (BU2) and adjust the picture height to 8 cm symmetrically around the screen centre.
- Adjust for a sharp trace with FOCUS (R2) and potentiometer R312 at normal brightness. After adjustment R2 should approximately be in mid-position.
  If necessary select a different value for R307.
- Check also that no brightness modulation occurs.

4. Mechanical adjustment of the measuring graticule

- Apply such a signal to the oscilloscope that the peaks of the signal fall outside the screen.
- Check that the trace is cut off symmetrically around the measuring graticule. If necessary readjust the excentric screw which is accessible after removing the bezel (see chapter VIII. C).

D. Y-AMPLIFIER

Before starting the following test procedure, the instrument should be switched in for at least 10 minutes.

1. D.C. Balance

- Set AC-O-DC (SK4) to 0.
- Set ×1-×10 (SK5) to ×1.
- Set V/cm (SK6) to 10 mV/cm.
- Set DC BAL (R4) to mid-position.
- Set LEVEL (R9) to AUT.
- Set Y-SHIFT (R6) to mid-position.
- Display the time-base line with R20.
- Adjust R20 so that the time-base line does not shift when V/cm (R7) is rotated.
- Set ×1-×10 (SK5) to ×10 and adjust the d.c. balance another time. With Y-SHIFT (R6) keep the time base line in the centre of the screen.
- Switch SK5 from ×10 to ×1; the time-base line should not shift more then 1 cm. Tolerance with final check: 2 cm.
  If necessary mount a different value for R55.
- Set AC-O-DC (SK4) to position DC.
- Short-circuit socket 1 MΩ//30 pF (BU2) to earth.
  The time-base line should not shift more than 2 mm.

2. Sensitivity

- Set V/cm (R7) to position CAL.
- Apply a voltage of 80 $mV_{p\text{-}p}$, frequency 2 kHz, to socket 1 MΩ//30 pF (BU2).
- Adjust R73 so that the trace height is 8 cm.
  After the adjustment, R73 should still have some control reserve. Tolerance at final check: 3%. If necessary, readjust R73.
- Vary the a.c. voltage to which the instrument is connected between 198 and 242 V.
  The trace height may not vary more than 3.5% and the trace may not shift more than 0.5 cm in the vertical direction.
- Set ×1-×10 (SK5) to position ×10 and decrease the input voltage by a factor 10.
- Adjust R71 so that the trace height is 8 cm.
  After adjusting, R71 should still have some control reserve left. Tolerance with final check: 3%. If necessary, readjust R71.
- Check the deflection coefficient in all positions of ×1-×10 (SK5) and V/cm (SK6) by continually applying the proper voltages having a frequency of 2 kHz.

The trace height should always be 8 cm, + or −3%.

- Display a trace having a height of 8 cm.
- Starting from the CAL position, turn V/cm (R7) fully counter-clockwise.
  The trace height should then be between 3 and 2 cm.

3. Noise

- Set ×1-×10 (SK5) to position ×10.
- Set V/cm (SK6) to position 10 mV/cm and V/cm (R7) to position CAL.
- With open input, the trace height due to noise may not exceed 2 mm. The interference from the E.H.T. converter may not result in a trace height exceeding 1 mm.
  With this measurement, the cabinet panels should be fitted.

4. Square-wave response

- Set ×1-×10 (SK5) to position ×1.
- Apply a square-wave voltage of 40 $mV_{p\text{-}p}$, frequency 1 MHz, rise time approximately 10 ns to socket 1 MΩ//30 pF (BU2).
- Select such a value for C48 that just no overshoot occurs.
- Only for PM 3220: select such a value for C47 that optimum square-wave reproduction is obtained.
- Only for PM 3221: adjust to optimum square-wave reproduction by means of potentiometer R74 and choice capacitor C49.
- Apply a square-wave voltage having a frequency of 2 kHz and a rise time of 25 ns to socket 1 MΩ//30 pF (BU2).
- At a trace height of 4 cm, adjust the relevant trimmers (see table) so that just no overshoot occurs.

Attenuator position	*Trimmer*
20 mV/cm	C34
50 mV/cm	C38
100 mV/cm	C19
200 mV/cm	C32
500 mV/cm	C36
1 V/cm	C24
2 V/cm	–
5 V/cm	–
10 V/cm	C29
20 V/cm	–

- Set V/cm (SK6) to position 10 mV/cm.
- Set ×1-×10 (SK5) to position ×10.
- Apply a square-wave voltage having a value of 4 mV_{p-p} and a frequency of 2 kHz to socket 1 MΩ//30 pF (BU2).
- Select such a value for R80 that optimum square-wave response is obtained.
- Connect an attenuator having an attenuation of 1 : 2 to socket 1 MΩ//30 pF. This attenuator may consist of a resistor of 1 MΩ, to which a capacitor of 10 pF and a trimmer of 25 pF have been connected in parallel.
- Apply a square-wave voltage having a value of 80 mV_{p-p} and a frequency of 2 kHz to the auxiliary attenuator.
- Adjust to optimum square-wave response (fig. 10) by means of the trimmer in the auxiliary attenuator.
  Permissible overshoot: 2%.
- In attenuator positions 100 mV/cm, 1 V/cm and 10 V/cm, adjust to optimum square-wave response at a trace height of 4 cm by means of trimmers C18, C23 and C28.
- Check the square-wave response in attenuator positions 20 mV/cm and 50 mV/cm at a trace height of 4 cm.

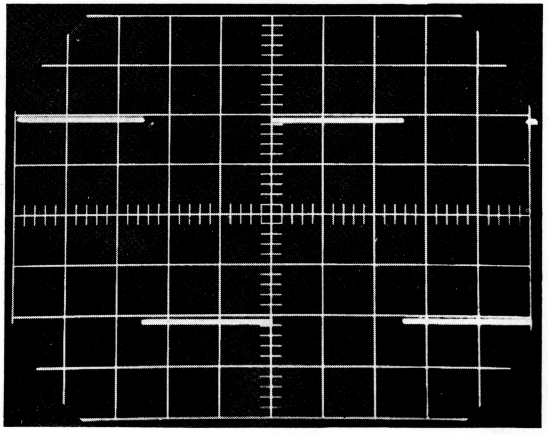

Fig. 10. Square-wave reproduction

5. Frequency response

- Set V/cm (SK6) to position 10 mV/cm.
- Set ×1-×10 (SK5) in succession to positions ×1 and ×10.
- Check the frequency response at a trace height of 8 cm.

SK5 in position ×1	SK5 in position ×10
2 kHz 8 cm	2 kHz 8 cm
10 MHz ≧ 5.6 cm	2 MHz ≧ 5.6 cm

If necessary, repeat point 4.

– In position AC of AC-O-DC (SK4), check that a d.c. voltage connected to the input socket is blocked by capacitor C16.

6. Shift and deflection

– Set ×1-×10 (SK5) to position ×1.
– Set V/cm (SK6) to position 100 mV/cm.
– Set TIME/cm (R8) to position CAL.
– Check the adjustment of the d.c. balance (point 1).
– Apply a sinusoidal voltage having a frequency of 100 kHz and such an amplitude that the trace height is 2.4 cm, to socket 1 MΩ//30 pF (BU2).
– Set V/cm (SK6) to position 10 mV/cm.
– Check that it is possible to display the peaks of the signal undistortedly within the screen by means of Y-SHIFT (R6).
– Apply a sinusoidal voltage having a frequency of 10 MHz and such an amplitude that the trace height is 3 cm, to socket 1 MΩ//30 pF (BU2).
– Double the input voltage and check that the deflection is 6 cm, + or −0.5 cm.
If necessary, repeat D5 and the first seven points of D4.

E. CALIBRATION VOLTAGE (carry out this check when the instrument has attained operating temperature)

– Set AC-O-DC (SK4) to position DC.
– Set ×1-×10 (SK5) to position ×1.
– Set V/cm (SK6) to position 1 V/cm.
– Set V/cm (R7) to position CAL.
– Connect socket CAL. 5 V (BU1) to socket 1 MΩ//30 pF (BU2). The trace height should then be 5 cm. If necessary, select a different value for R1107 (at calibration socket).
Tolerance at final check: + or −1%.
– Check the frequency of the calibration voltage.
This should be 8...12 kHz.

F. X-AMPLIFIER

1. Sensitivity

– Set TIME/cm (SK7) to position X-EXT.

- Set MAGN (SK2) to position X5.
- Set potentiometer R713 to its mid position.
- Adjust potentiometer R600 for zero volts at terminal X-EXT (BU3).
- Apply a square-wave voltage with a frequency of 2 kHz to X-EXT (BU3).
- Display the square-wave voltage at the collector of TS602 on an oscilloscope and adjust trimmer C525 for optimum square-wave response.
- Set MAGN (SK2) to position $\times 1$.
- Connect socket CAL. 5V (BU1) to terminal X-EXT (BU3).
- Check that the trace width is 5 cm.
  If necessary, correct with R713.
  Tolerance at final check: + or −2%.

2. Square-wave and frequency response

- Apply an external time base voltage to socket 1 MΩ//30 pF.
- Set MAGN (SK2) to position $\times 1$.
- Apply a square-wave voltage of 8 $V_{p\text{-}p}$, frequency 100 kHz to socket X-EXT (BU3).
- Adjust for optimum square-wave response by selecting a suitable value for C702.
- Check the frequency response at a trace width of 10 cm.
  2 kHz 10 cm
  1.5 MHz ≧ 7 cm

G. TIME-BASE GENERATOR

1. Stability

- Set LEVEL (R9) to position AUT.
- Set + /−(SK9) to position +.
- Set TIME/cm (SK7) to position .5 μsec/cm.
- Set TIME/cm (R8) to position CAL.
- Apply a voltage having a frequency of 2 kHz and such an amplitude that the trace height is 2 cm to socket 1 MΩ//30 pF (BU2).
- Adjust potentiometer STAB (R5) so that a triggered display is obtained.
- Decrease the amplitude of the input voltage so that the trace height is 4 mm.
  A triggered display should be obtained.

If necessary select a different value for R510.

– Set LEVEL (R9) to the middle of its control range.
A triggered display should be obtained.
If necessary select a different value for R515.

2. Triggering

a. Internal

– Set INT-EXT (SK10) to position INT.
– Apply a sinusoidal voltage having a frequency of 2 kHz and such an amplitude that, after the correct adjustment of LEVEL (R9), a triggered display is obtained with a trace height of 4 mm, to socket 1 MΩ//30 pF (BU2).
– Check that a triggered trace is also obtained at frequencies of 10 Hz and 1 MHz and a trace height of 5 mm.
– Check, at a trace height of 2 cm and a frequency of 10 MHz, that a triggered trace is obtained.
– Set +/–(SK9) to position –.
The trace should then be triggered on the negative-going edge of the signal. If necessary, readjust LEVEL (R9).
– At frequencies of 10 Hz and 1 MHz gradually increase the trace height to 8 cm.
– Check that the triggering is not disturbed.
– At a frequency of 2 kHz, check that the trigger level can be adjusted over 8 cm by means of LEVEL (R9).
– Turn LEVEL (R9) fully anti-clockwise (not in position AUT) and fully clockwise. The time-base generator should be switched off in both extreme positions.
– Check that no double trace arises when the time coefficient is varied with TIME/cm (R8). If necessary slightly readjust STAB (R5).

b. External

– Set INT-EXT (SK10) to position EXT.
– Apply a voltage of 1 $V_{p\text{-}p}$, coming from the same voltage source as the voltage applied to 1 MΩ//30 pF (BU2), to terminal TRIGG (BU5).
– Check that a properly triggered display is obtained at frequencies of 10 Hz and 2 MHz.

c. Automatic

- Set LEVEL (R9) to position AUT.
- Set TIME/cm (SK6) to position 200 μsec/cm.
- Set INT-EXT (SK10) to position INT.
  Without input signal, a time base line should be displayed on the screen.
- Apply a sinusoidal voltage having a frequency of 1 MHz to 1 MΩ// 30 pF (BU2).
- Check that a triggered display is obtained at a trace height of 2 cm.

d. T.V. frame and T.V. line

- Set TIME/cm (SK7) to position T.V. FRAME.
- Set +/−(SK9) to position −.
- Apply a positive video signal (French system, frame synchronisation is 0.4 of the line time) to socket 1 MΩ//30 pF (BU2).
- With LEVEL (R9) adjust for a trace, triggered on the frame pulse, at a trace height of 1 cm (video plus synchronising signal).
- Set TIME/cm (SK7) to position T.V. LINE.
- Check that a trace is displayed which has been triggered on the line synchronising pulse. If necessary slightly readjust LEVEL (R9).
- Repeat both checks with a negative video signal and +/− (SK9) in position +.

3. Time coefficients

- Set TIME/cm (SK7) to position 1 msec.
- Set TIME/cm (R8) to position CAL.
- Set MAGN (SK2) to position ×1.
- Apply a square-wave voltage having a frequency of 1 kHz to 1 MΩ//30 pF (BU2).
- By means of R536, adjust the time coefficient so that, measured across the centre 8 cm, 8 complete periods are displayed.
- Adjust the trace width to 10 to 11 cm by means of R546.
- Recheck the time coefficient. If necessary, readjust R536.
- Set TIME/cm (SK7) to position .5 msec.
- Increase the frequency of the input signal to 2 kHz.
- Check the time coefficient across the centre 8 cm.
  Tolerance + or − 1%. Correction is possible with R595.
- Set TIME/cm (SK7) to position .5 μsec.

- Accurately adjust the time coefficient by selecting the correct value for C548.
- Check the time coefficient in all positions of TIME/cm (SK7) across the centre 8 cm of the screen.
  Tolerance in all positions except .5 sec.: + or −2% (at final check: + or −4%), with respect to the value given on the text plate.
  Tolerance in position .5 sec.: + or −5% (at in final check: + or −7%).
- Check that in position T.V. LINE at least 2 line pulses are visible, when a signal as described in section G2d is applied.
- Check that in position TV FRAME at least 2 frame pulses are visible, when a signal as described in section G2d is applied.
- Check that the trace width is at least 9 cm in all positions of TIME/cm (SK7).
- Check that the control range of TIME/cm (R8) in position 1 msec. of TIME/cm (SK7) is 1 : 2.6 to 1 : 3.5.
- Set MAGN (SK2) to position ×5.
- When X-SHIFT (R3) is fully anti-clockwise or fully clockwise, it should be possible to display the end of the time base line.
- Set TIME/cm (SK7) to position 50 μsec.
- Apply a signal of 20 kHz to socket 1 MΩ//30 pF (BU2).
- Check that the width of 1 period is 5 cm, + or −10%.
- Set MAGN (SK2) to position ×2.
- Check that the width of 1 period is 2 cm, + or −10%.

4. Linearity

- Set MAGN (SK2) to position ×1.
- Set TIME/cm (SK7) to position .5 μsec.
- Apply a sinusoidal voltage having a frequency of 2 MHz to 1 MΩ// 30 pF (BU2).
- Adjust the picture symmetrically around the screen centre by means of Y-SHIFT (R6).
- Across the centre 8 cm, measure the difference in period width between the two most deviating periods.
  This may not exceed 0.5 mm.
- Set MAGN (SK2) to position ×5 and repeat the above check.
  Tolerance: 0.5 cm.

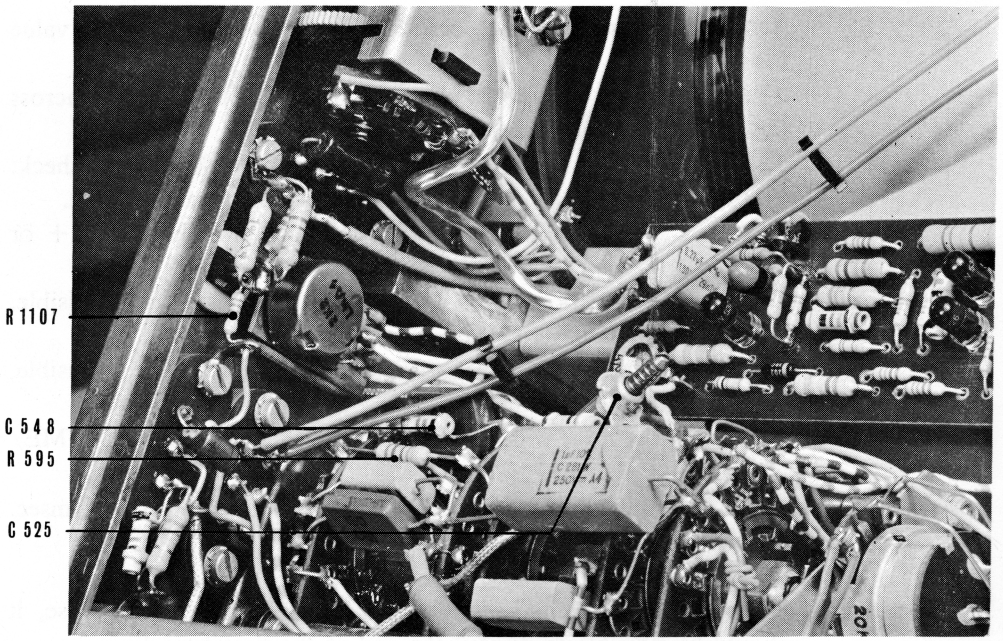

Fig. 11. Adjusting elements at calibration socket and switches

5. Beam deflection

- Set LEVEL (R9) to position AUT.
- Set TIME/cm (SK1) subsequently to positions 0.5, 1 and 2 μsec.
- Check that the flyback of the sawtooth voltage is suppressed and that the intensity of the time base line is constant along its entire length.
- If necessary select a different value for R585.

6. Sawtooth voltage on terminal TIME BASE (BU8)

Check that this voltage has a value of at least 8 $V_{p\text{-}p}$.

7. Z-Modulation

- Apply a voltage of 20 $V_{p\text{-}p}$ having a frequency of 2 kHz to terminal Z-MOD (BU6).
- Externally trigger the instrument with this brightness modulation voltage.
- Check that the trace is diplayed in light and dark at normal intensity.

H. ATTENUATOR PROBE PM 9326A/10

– Connect the attenuator probe to socket 1 MΩ//30 pF (BU2).
– Set V/cm (SK6) to position 0.1 V/cm and V/cm (R7) to position CAL.
– Set ×1-×10 (SK5) to position ×1.
– Connect the probe to the internal calibration voltage (socket CAL. 5 V; BU1) and check the square-wave response.
If necessary, readjust the trimmer in the probe.

This is effected as follows (Fig. 12):

– Loosen ring 2 while holding jacket 1.
– Hold jacket 1 and trim probe 3 until the reproduction of the applied voltage is satisfactory.
– Tighten ring 2 again.

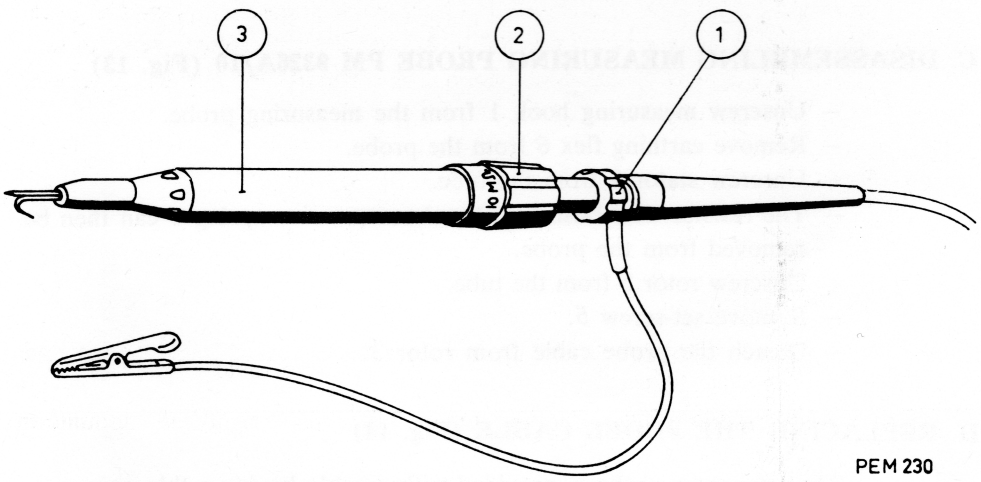

Fig. 12. Adjusting measuring probe PM 9326A/10

XII. Replacing parts

During the replacement of parts, the instrument should be switched off.

A. REPLACING THE CATHODE RAY TUBE

- Remove th high voltage connection.
- Remove the text plate with bezel, measuring graticule and contrast plate.
- Remove the tube holder.
- Unscrew screw S (Fig. 17).
- Push the tube out of the oscilloscope via the opening at the front.
- Check, when a new tube has been fitted, that the time base line is horizontal. If necessary, set the tube to the correct position with lever L (Fig. 17).
- Readjust the instrument according to chapter XI.

B. TRANSISTOR TS1001

- Remove the cable compartment at the rear of the instrument (2 screws; watch the spacers).
- Remove the hard paper plate which is then released (2 screws). Transistor TS1001 can then be replaced.

C. DISASSEMBLING MEASURING PROBE PM 9326A/10 (Fig. 13)

- Unscrew measuring hook 1 from the measuring probe.
- Remove earthing flex 6 from the probe.
- Unscrew stator 2 from the tube.
- The resistor with bushing 12 and compression spring 4 can then be removed from the probe.
- Unscrew rotor 3 from the tube.
- Remove set-screw 5.
- Detach the probe cable from rotor 3.

D. REPLACING THE PROBE CABLE (Fig. 14)

The attenuator probe is provided with a cable having a thin core. When replacing, proceed as follows:

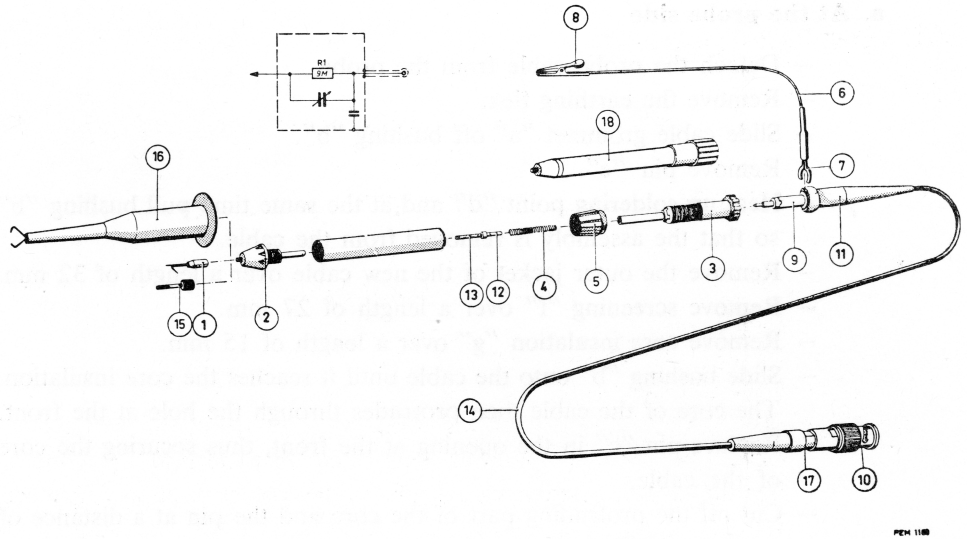

Fig. 13. Mouting diagram of the attenuator measuring probe

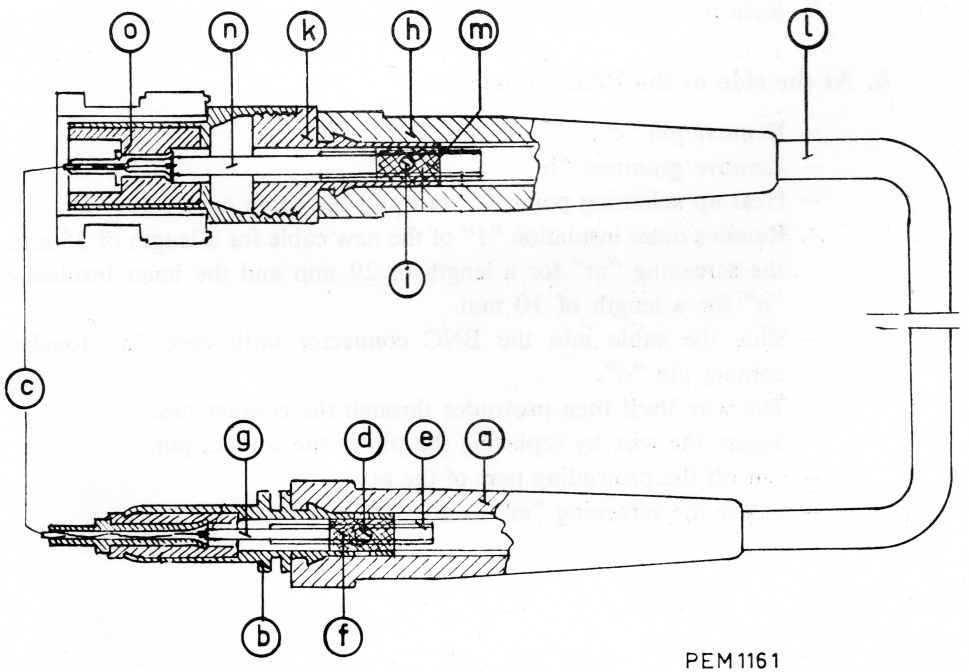

Fig. 14. Mounting diagram of the measuring probe cable

a. At the probe side

- Detach the probe cable from the probe.
- Remove the earthing flex.
- Slide cable grommet "a" off bushing "b".
- Remove pin "c".
- Heat up soldering point "d" and at the same time pull bushing "b" so that the assembly is removed from the cable.
- Remove the outer jacket of the new cable over a length of 32 mm.
- Remove screening "f" over a length of 27 mm.
- Remove core insulation "g" over a length of 15 mm.
- Slide bushing "b" onto the cable until it reaches the core insulation. The core of the cable then protrudes through the hole at the front.
- Replace pin "c" in the opening at the front, thus securing the core of the cable.
- Cut off the protruding part of the core and the pin at a distance of 1 mm from the plug.
- Solder screening "f" onto bushing "b".
- Slide grommet "a" over bushing "b".
- Refit the earthing flex.

b. At the side of the BNC connector

- Remove pin "c".
- Remove grommet "h".
- Heat up soldering point "i" and pull the cable out of nut "k".
- Remove outer insulation "1" of the new cable for a length of 35 mm, the screening "m" for a length of 29 mm and the inner insulation "n" for a length of 10 mm.
- Slide the cable into the BNC connector until core "n" touches contact pin "o".
- The wire itself then protrudes through the contact pin.
- Secure the wire by replacing the pin in the contact pin.
- Cut off the protruding part of the pin.
- Solder the screening "m" to nut "k" at point "i".

XIII. Assistance in fault finding

A. VOLTAGES OF THE SUPPLY TRANSFORMER

The available non-loaded voltages are given in the form of a table with the drawing of the supply transformer (in Fig. 31).
The loaded voltages are indicated in the circuit diagram of the supply section.

B. VOLTAGES AND VOLTAGE SHAPES IN THE INSTRUMENT

The d.c. levels on the electrodes of the valves and the semiconductors are indicated at the relevant points in the drawings on the print plates and the circuit diagrams.

The voltage shapes haven been measured as follows:

- A sinusoidal voltage of 80 $mV_{p\text{-}p}$, 2 kHz on input socket 1 MΩ// 30 pF.
- V/cm (SK6) in position .01 V/cm.
- V/cm (R7) in position CAL.
- TIME/cm (SK7) in position .1 msec.
- TIME/cm (R8) in position CAL.
- LEVEL (R9) in position AUT.
- MAGN (R1) in position ×1.
- AC-O-DC (SK4) in position AC.
- ×1-×10 (SK5) in position ×1.
- +/− (SK9) in position +.
- INT/EXT (SK10) in position INT.
- X-SHIFT (R3) and Y-SHIFT (R6) in their mid positions.

The d.c. levels have been measured under the same conditions, except those in the X-amplifier which have been measured without input signal on socket X-EXT and with TIME/cm (SK7) in position X-EXT.
The d.c. values have been measured with a valve voltmeter.
These values may deviate slightly for each oscilloscope.

C. REMARKS

In case of defects, one can always apply to the world wide PHILIPS Service Organisation.
When the instrument is to be forwarded to a PHILIPS service workshop for repairs, the following points should be observed.

- Tie on a label bearing full name and address of the sender.
- Indicate as completely as possible the symptom(s) of the fault(s).
- Carefully pack the instrument in the original packing, or, if this is no longer available, in a wooden crate.
- Send the instrument to the address provided by your local PHILIPS representative.

XIV. List of parts

A. MECHANICAL PARTS

Item	*Fig.*	*Quantity*	*Ordering number*	*Description*
1	15	1	4822 455 80001	Instruction plate PM 3221
			4822 455 80041	Instruction plate PM 3220
2	15	1	4822 413 50426	Knob (R1)
3	15	3	4822 413 50427	Knob (R3, SK2, SK3)
4	15	1	4822 268 10031	Contact pin
5	15	1	4822 325 80058	Grommet
6	15	3	4822 277 20014	Sliding switch, 2-pole (SK5, SK9, SK10)
7	15	4	4822 290 40011	Connection terminal
8	15	2	4822 290 40012	Earthing terminal
9	15	2	4822 413 30082	Control knob, diam. 14 mm, shaft diam. 4 mm.
10	15	2	4822 413 70038	Lid for knob, item 9
11	15	2	4822 413 30085	Control knob, diam. 14 mm, shaft diam. 4 mm.
12	15	2	4822 413 70039	Lid for knob, item 11
13	15	2	4822 413 40112	Switch knob, diam. 22 mm
14	15	1	4822 265 10004	BNC connector, BU2
15	15	4	4822 262 70221	Base
16	15	1	4822 455 80038	Instruction plate, lower
17	15	2	4822 277 20009	Sliding switch, 3-pole (SK3, SK4)
18	15	1	4822 413 50487	Knob (R4)
19	15	1	4822 450 10019	Measuring graticule
20	15	1	4822 480 30027	Contrast plate
21	15	1	4822 498 40068	Grip
22	15	2	4822 508 80006	Ornamental profile
23	16	1	4822 272 10003	Mains voltage adapter
24	16	1	4822 265 40012	Fuse holder
25	16	1	4822 693 80004	Cable compartment
26	17	5	4822 255 20022	Lamp holder
27	17	1	4822 290 30044	Anode contact
28	17	1	4822 273 60041	Attenuator switch
29	17	10	4822 404 50127	Print terminal
30	17	5	4822 255 70004	Valve holder, noval
37	17	1	4822 255 70099	Valve holder (cathode ray tube)

Item	*Fig.*	*Quantity*	*Ordering number*	*Description*
32	17	220 cm	4822 320 40022	Delay line (only for PM 3221)
33	18	1	4822 273 80121	Time-base switch
34	18	1	4822 273 30101	Magnifier switch
35	18	1	4822 401 10269	Moutingstrip
		1	4822 390 10007	Switch oil

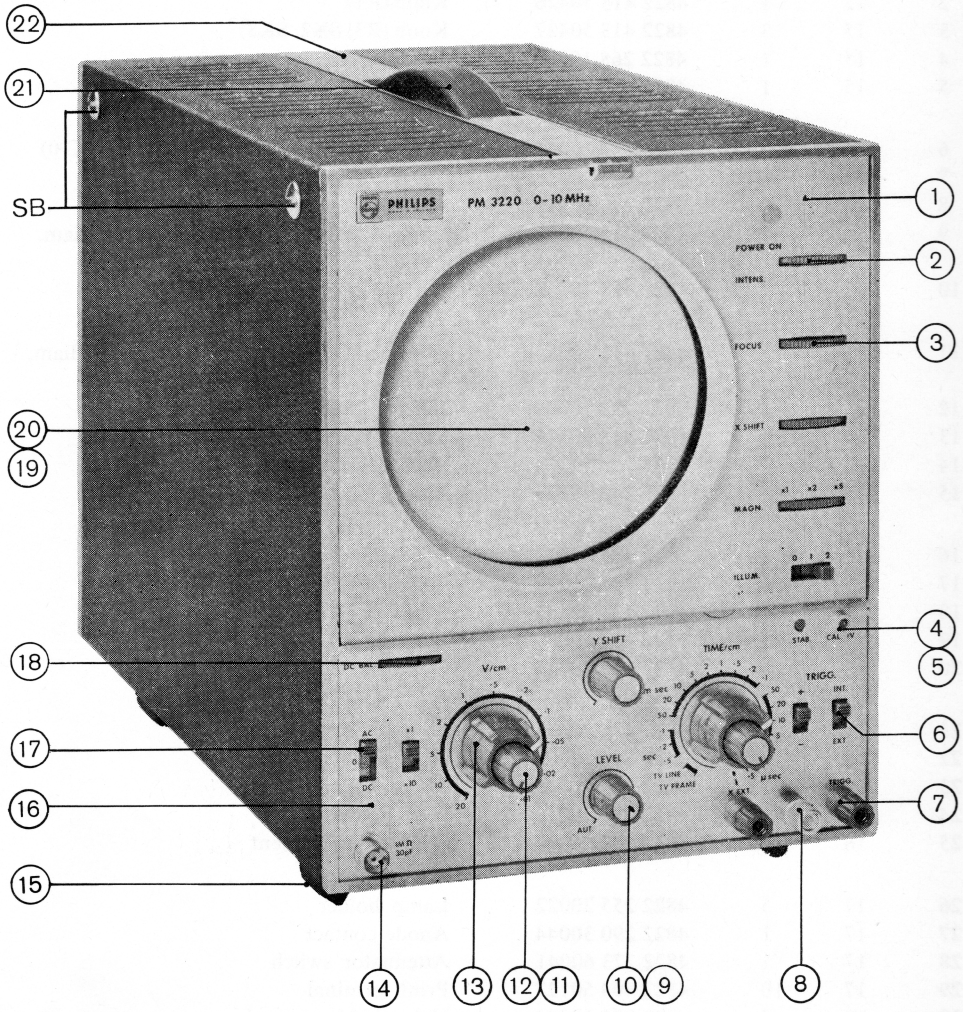

Fig. 15. Front view with item numbers

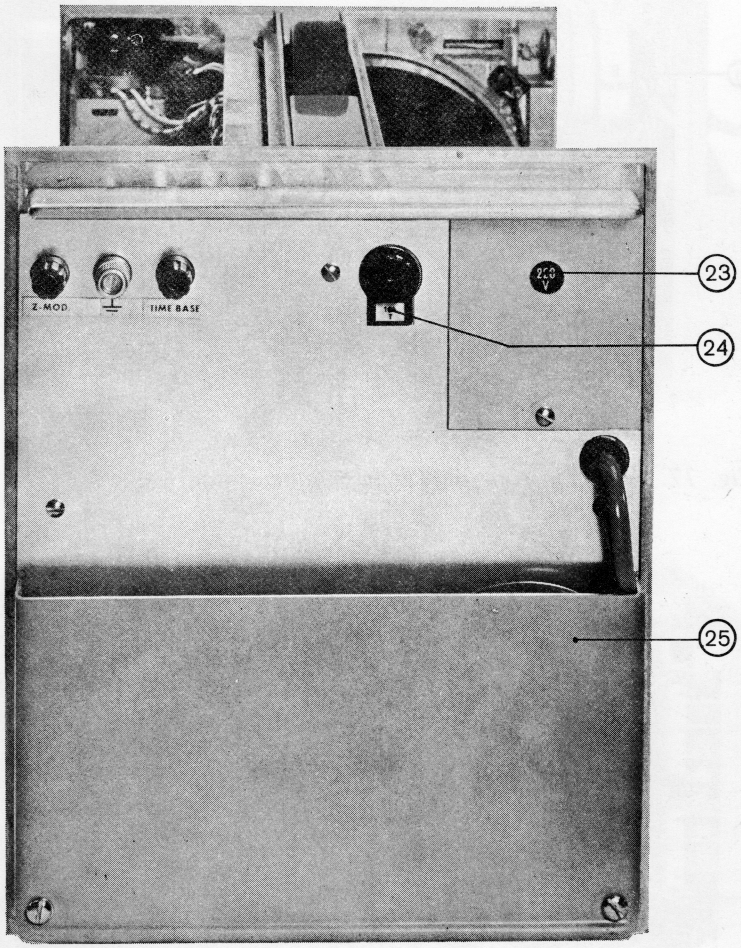

Fig. 16. Rear view with item numbers

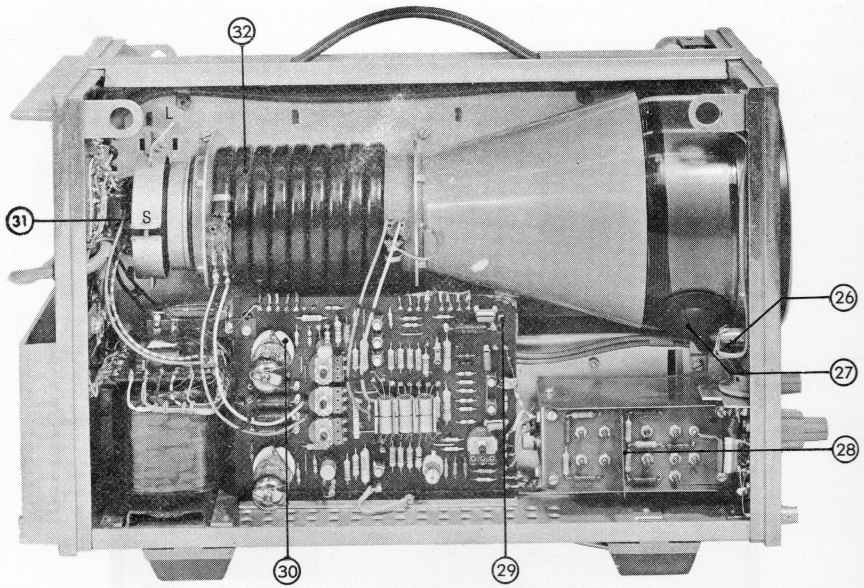

Fig. 17. Left side view with item numbers

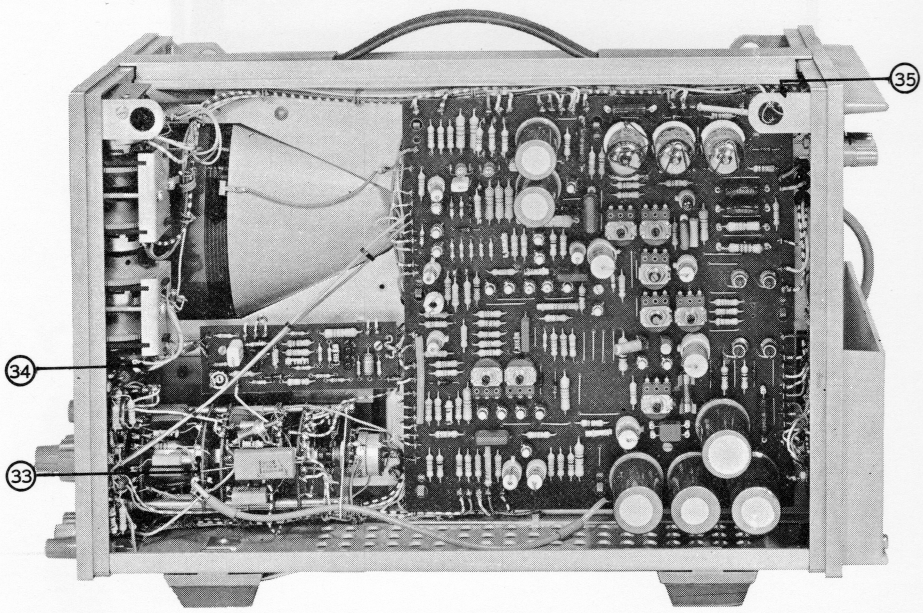

Fig. 18. Right side view with item numbers

PARTS OF PROBES PM 9326A/10 AND PM 9325 (Fig. 13)

Item	*Fig.*	*Quantity*	*Ordering no.*	*Description*
	PM9326	PM9325		
1	1	1	4822 268 10039	Measuring hook
2	1		4822 535 70114	Stator
3	1		4822 535 70113	Rotor
4	1		4822 492 50124	Pressure spring
5	1		4822 532 40047	Set nut
6	15 cm	15 cm	4822 323 20053	Cable
7	1	1	4822 290 30006	Cable shoe
8	1	1	4822 290 40044	Crocodile clip
9	1	1	4822 268 10021	Plug
10	1	1	4822 264 10025	BNC connector
11	1	1	4822 325 50013	Cable grommet
12	1		4822 532 20047	Bushing
13	1		4822 111 20155	Resistor
14	1 m	1 m	4822 320 10018	Cable
15	1	1	4822 268 10029	Plug pin
16	1	1	4822 264 20009	Measuring terminal
17	1	1	4822 506 40008	Cable nut
18		1	4822 266 20015	Measuring probe 1 : 1
19	1	1	4822 321 20087	Measuring probe cable, complete
	1	1	4822 321 20096	Earthing flex

B. ELECTRICAL — ELEKTRISCH — ELEKTRISCH — ELECTRIQUE — ELECTRICOS

This parts list does not contain multi-purpose and standard parts. These components are indicated in the circuit diagram by means of identification marks. The specification can be derived from the survey below.

Diese Ersatzteilliste enthält keine Universal- und Standard-Teile. Diese sind im jeweiligen Prinzipschaltbild mit Kennzeichnungen versehen. Die Spezifikation kann aus nachstehender Übersicht abgeleitet werden.

In deze stuklijst zijn geen universele en standaardonderdelen opgenomen. Deze componenten zijn in het principeschema met een merkteken aangegeven. De specificatie van deze merktekens is hieronder vermeld.

La présente liste ne contient pas des pièces universelles et standard. Celles-ci ont été repérées dans le schéma de principe. Leurs specifications sont indiquées ci-dessous.

Esta lista de componentes no comprende componentes universales ni standard. Estos componentes están provistos en el esquema de principio de una marca. El significado de estas marcas se indica a continuación.

Carbon resistor E24 series
Kohleschichtwiderstand, Reihe E24
Koolweerstand E24 reeks
Résistance au carbone, série E24
Resistencia de carbón, serie E24
0,125 W 5%

Carbon resistor E12 series
Kohleschichtwiderstand, Reihe E12
Koolweerstand E12 reeks
Résistance au carbone, série E12
Resistencia de carbón, serie E12
1 W ≦ 2,2 MΩ, 5%
> 2,2 MΩ, 10%

Carbon resistor E12 series
Kohleschichtwiderstand, Reihe E12
Koolweerstand E12 reeks
Résistance au carbone, série E12
Resistencia de carbón, serie E12
0,25 W ≦ 1 MΩ, 5%
> 1 MΩ, 10%

Carbon resistor E12 series
Kohleschichtwiderstand, Reihe E12
Koolweerstand E12 reeks
Résistance au carbone, série E12
Resistencia de carbón, serie E12
2 W 5%

Carbon resistor E24 series
Kohleschichtwiderstand, Reihe E24
Koolweerstand E24 reeks
Résistance au carbone, série E24
Resistencia de carbón, serie E24
0,5 W ≦ 5 MΩ, 1%
> 5 ≦ 10 MΩ, 2%
> 10 MΩ, 5%

Wire-wound resistor
Drahtwiderstand
Draadgewonden weerstand
Résistance bobinée
Resistencia bobinada
0,4 – 1,8 W 0,5%

Carbon resistor E12 series
Kohleschichtwiderstand, Reihe E12
Koolweerstand E12 reeks
Résistance au carbone, série E12
Resistencia de carbón, serie E12
0,5 W ≦ 1,5MΩ, 5%
> 1,5MΩ, 10%

Wire-wound resistor
Drahtwiderstand
Draadgewonden weerstand
Résistance bobinée
Resistencia bobinada
5,5 W ≦ 200 Ω, 10%
> 200 Ω, 5%

Wire-wound resistor
Drahtwiderstand
Draadgewonden weerstand
Résistance bobinée
Resistencia bobinada
10 W 5%

Tubular ceramic capacitor
Rohrkondensator
Keramische kondensator, buistype
Condensateur céramique tubulaire
Condensador cerámico tubular
500 V

Polyester capacitor
Polyesterkondensator
Polyesterkondensator
Condensateur au polyester
Condensador polyester
400 V

Tubular ceramic capacitor
Rohrkondensator
Keramische kondensator, buistype
Condensateur céramique tubulaire
Condensador cerámico tubular
700 V

Flat-foil polyester capacitor
Miniatur-Polyesterkondensator (flach)
Platte miniatuur polyesterkondensator
Condensateur au polyester, type plat
Condensador polyester, tipo de placas planas
250 V

Ceramic capacitor, "pin-up"
Keramikkondensator "Pin-up" (Perltyp)
Keramische kondensator "Pin-up" type
Condensateur céramique, type perle
Condensador cerámico, versión "colgable"
500 V

Paper capacitor
Papierkondensator
Papierkondensator
Condensateur au papier
Condensador de papel
1000 V

"Microplate" ceramic capacitor
Miniatur-Scheibenkondensator
"Microplate" keramische kondensator
Condensateur céramique "microplate"
Condensador cerámico "microplaca"
30 V

Wire-wound trimmer
Drahttrimmer
Draadgewonden trimmer
Trimmer à fil
Trimmer bobinado

Mica capacitor
Glimmerkondensator
Micakondensator
Condensateur au mica
Condensador de mica
500 V

Tubular ceramic trimmer
Rohrtrimmer
Buisvormige keramische trimmer
Trimmer céramique tubulaire
Trimmer cerámico tubular

For multi-purpose and standard parts, please see PHILIPS' Service Catalogue.
Für die Universal- und Standard-Teile siehe den PHILIPS Service-Katalog.
Voor universele en standaardonderdelen raadplege men de PHILIPS Service Catalogus.
Pour les pièces universelles et standard veuillez consulter le Catalogue Service PHILIPS.
Para piezas universales y standard consulte el Catálogo de Servicio PHILIPS.

Capacitors

Item	Ordering number	Value	Operating voltage	Tolerance	Description
C16	4822 121 40145	0.1 μF	630 V		Polyester
C41	4822 121 40029	10 nF	250 V	10%	Metal polyester
C42	4822 124 20084	80 μF	16 V		Electrolytic
C44	4822 121 40039	12 nF	250 V	10%	Metal polyester
C46	4822 124 20042	32 μF	100 V		Electrolytic
C51	4822 124 20059	2.5 μF	64 V		Electrolytic
C301	4822 121 30064	15 nF	1.6 kV	10%	Metal polyester
C302	4822 121 40029	10 nF	250 V	10%	Metal polyester
C502	4822 124 20079	2.5 μF	16 V		Electrolytic
C503	4822 124 20085	1 μF	40 V		Electrolytic
C504	4822 124 20351	6.4 μF	40 V		Electrolytic
C505	4822 124 20347	4 μF	64 V		Electrolytic
C513	4822 124 20084	80 μF	16 V		Electrolytic
C514	4822 124 20084	80 μF	16 V		Electrolytic
C517	4822 124 20097	32 μF	40 V		Electrolytic
C522	4822 121 40029	10 nF	250 V	10%	Metal polyester
C526	4822 124 20093	10 μF	64 V		Electrolytic
C528	4822 111 30192	1 μF			Box capacitor
C529	see C528	100 nF			
C530	see C528	10 nF			
C531	4822 121 50066 4822 120 30064	975 pF	500 V		Mica (2 in par.)
C532	4822 120 30093 4822 120 30077	375 pF	500 V		Mica (2 in par.)
C533	4822 120 30086 4822 120 30054	170 pF	5000 V		Mica (2 in par.)
C535	4822 121 10105	10 μF			Box capacitor
C544	4822 121 40013	1 μF	250 V	10%	Metal polyester
C546	4822 121 40035	150 nF	250 V	10%	Metal polyester
C547	4822 124 20077	10 μF	16 V		Electrolytic
C601	4822 121 40194	220 nF	100 V		Metal polyester
C606	4822 124 20081	20 μF	16 V		Electrolytic
C1001	4822 124 20181	64 μF	300 V		Electrolytic
C1002	4822 124 20028	100 μF	40 V		Electrolytic
C1003	4822 121 20181	64 μF	300 V		Electrolytic
C1004	4822 124 40045	100 μF	200 V		Electrolytic
C1006	4822 124 40055	250 μF	100 V		Electrolytic
C1007	4822 124 20082	250 μF	16 V		Electrolytic
C1008	4822 124 40004	1250 μF	25 V		Electrolytic (2 in par.)
C1009	4822 124 20078	125 μF	16 V		Electrolytic
C1010	4822 121 40044	560 nF	250 V		Plate
C1101	4822 124 20078	125 μF	16 V		Electrolytic

Item	Ordering number	Value	Operating voltage	Tolerance	Description
C1102	4822 121 40036	100 nF	250 V	10%	Metal polyester
C1103	4822 121 40036	100 nF	250 V	10%	Metal polyester
C1104	4822 121 30064	15 nF	1.6 kV		Paper
C1106	4822 121 30064	15 nF	1.6 kV		Paper
C1107	4822 121 30064	15 nF	1.6 kV		Paper
C1108	4822 121 30064	15 nF	1.6 kV		Paper

Resistors

Item	Ordering number	Value	Power	Tolerance	Description
R1	4822 101 40022	1 MΩ			Potentiometer, lin.
R2	4822 101 40022	1 MΩ			Potentiometer, lin.
R3	4822 101 20111	20 kΩ			Potentiometer, lin.
R4	4822 101 20237	2200 Ω			Potentiometer, lin.
R5	4822 101 20074	2200 Ω			Potentiometer, lin.
R6	4822 101 20074	2200 Ω			Potentiometer, lin.
R7	4822 101 20146	500 Ω			Potentiometer, lin.
R8	4822 101 40014	22 kΩ			Potentiometer, lin.
R9	4822 101 40011	5 kΩ			Potentiometer, lin.
R16	4822 111 20148	900 kΩ	0.1 W	1%	Carbon
R17	4822 111 20115	111 kΩ	0.125 W	1%	Carbon
R18	4822 111 20152	990 kΩ	0.1 W	1%	Carbon
R19	4822 111 20107	10.1 kΩ	0.125 W	1%	Carbon
R20	4822 101 20047	2.2 kΩ			Potentiometer, lin.
R22	4822 111 20018	1 kΩ	0.125 W	1%	Carbon
R24	4822 110 30187	500 kΩ	0.125 W	1%	Carbon (2 in par.)
R26	4822 111 20121	1 MΩ	0.1 W	1%	Carbon
R27	4822 111 20147	800 kΩ	0.1 W	1%	Carbon
R28	4822 111 20117	250 kΩ	0.125 W	1%	Carbon
R71	4822 101 20154	220 Ω			Potentiometer, lin.
R73	4822 101 20154	220 Ω			Potentiometer, lin.
R74	4822 101 20084	10 kΩ			Potentiometer, lin. (only for PM 3221)
R312	4822 101 20081	470 kΩ			Potentiometer PW
R313	4822 101 20081	470 kΩ			Potentiometer PW
R536	4822 101 20076	4.7 kΩ			Potentiometer PW
R546	4822 101 20074	2.2 kΩ			Potentiometer PW
R594	4822 111 20117	125 kΩ			Carbon (2 in par.)
R596	4822 110 30187	500 kΩ			Carbon (2 in par.)
R600	4822 100 10088	220 kΩ	0.1 W	20%	Potentiometer PW
R713	4822 101 20267	470 Ω			Potentiometer PW
R1004	4822 101 20154	220 Ω			Potentiometer, lin
R1014	4822 101 20073	1 kΩ			Potentiometer PW
R1018	4822 101 20073	1 kΩ			Potentiometer PW

Limit and target values of choice elements.

When the instrument is adjusted, the values of choice resistors and capacitors should be selected within the following limits or according to the following target values.
The choice elements can be recognised in the circuit diagram by the hatching over the elements and the lacking of a value indication.

Capacitors

C47	1.8 pF...5.6 pF	C48	12 pF...56 pF
C49	82 pF...220 pF	C548	1.5 pF...8.2 pF
C702	270 pF...470 pF		

Resistors

R55	12 kΩ...82 kΩ	R309	ca. 560 kΩ	R595	ca. 2.2 MΩ
R80	68 Ω...270 Ω	R510	ca. 56 kΩ	R1011	150 kΩ...680 kΩ
R307	ca. 1.5 MΩ	R515	ca. 47 kΩ	R1016	680 Ω...2.2 kΩ
R308	ca. 1 MΩ	R585	5.6 kΩ...56 kΩ	R1107	ca. 5.6 kΩ

Miscellaneous parts

Item	*Ordering number*	*Description*
T1001	4822 146 80069	Supply transformer
T1100	4822 148 60001	High voltage transformer
VL1001	4822 253 30021	Fuse
VL1002	4822 252 20001	Fuse
VL1003	4822 253 30021	Fuse
L1	4822 157 50175	Coil
L2	4822 157 50175	Coil
L3	4822 157 50175	Coil
L4	4822 157 50175	Coil
L1001	4822 157 50223	Coil
U2	4822 216 50115	Print plate complete with parts (Y-amplifier)
U3	4822 216 50116	Print plate complete with parts (time base, X-amplifier, supply)
U4	4822 216 50086	Print plate complete with parts (high voltage unit)
U6	4822 216 50126	Print plate complete with parts (X-preamplifier)

Valves

Number	*Type*	*Number*	*Type*
B2	ECC88	B701	E810F
B3	ECC88	B702	E810F
B301	D13-27GH	B1001	ECC88
B302	GL8	B1002	ZZ1000
B303	GL8		

Transistors

Number	*Type*	*Number*	*Type*
TS1	AF118	TS506	ASZ21
TS2	AF118	TS507	ASZ21
TS3	AF118	TS508	AF124
TS4	AF118	TS509	2N930
TS6	AF124	TS511	2N929 or BC107 or BF115
TS7	AF124	TS512	AF124
TS8	AF124	TS513	AF124
TS9	AF118	TS514	AF124
TS10	AF124	TS518	BF115
TS11	AF118	TS519	BF115
TS12	AF118	TS520	2N929 or BC107 or BF115
TS13	AF118	TS601	4822 130 40142 (FW5324)
TS14	BFW10	TS602	4822 130 40142 (FW3524)
TS15	BFW10	TS603	4822 130 40142 (FW5324)
TS500	BF115	TS1001	ASZ16
TS501	BF115	TS1002	AC128
TS502	BF115	TS1003	AF118
TS503	BF115	TS1004	AF118
TS504	BF115	TS1101	ASZ18
TS505	AF124		

The F.E.T.s TS14 and TS15 should be matched as pairs in the following way.
Apply a voltage of +9 V to the drain via a resistor of 470 Ω.
Apply a voltage of —16 V to the source via a resistor of 5.6 kΩ.
Earth the gate via a resistor of 1 MΩ.
Measure the gate - source voltage. For a pair this should not differ more than 150 mV.
Transistors TS1...TS4, TS9, TS11, TS12 and TS13 should be selected as a matched pair (tol. 10%) with respect to the h_{fe} factor: $50 < h_{fe} < 200$ at $I_C = 5$ mA and $V_{CE} = 4$ V.
The I_{CEO} of transistors TS9, TS11, TS12 and TS13 should be lower than 70 μA at 25°C.
Transistor TS511 should have an $h_{fe} < 200$ at $I_C = 5$ mA and $V_{CE} = 4$ V.

Diodes

Number	*Type*	*Number*	*Type*
GR1	OA202	GR1007	BYX21/200R
GR3	OA95	GR1008	4822 130 30142 (OA202)
GR4	OA95	GR1009	4822 130 30142 (OA202)
GR501	AAZ15	GR1101	BYX11 *)
GR502	BAY38	GR1102	BYX11 *)
GR1003	BYX21/200	GR1103	BYX11 *)
GR1004	BYX21/200R	GR1104	BYX11 *)
GR1006	BYX21/200		

**) These diodes can be replaced by BYX 10, but in that case an extra diode BYX 10 should be added to the series circuits of GR1101-GR1102 and GR1103-GR1104.*

Zener diodes

Number	*Type*	
GR2	4822 130 30132	(BZY59)
GR503	4822 130 30133	(BZY62)
GR1011	4822 130 30145	(OAZ212)
GR1106	4822 130 30132	(BZY59)

Rectifier cells

Number	*Type*
GR1001	4822 130 50194
GR1002	4822 130 50188

Lamps

Number	*Type*	
LA1001...LA1005	4822 134 40054	(6828)

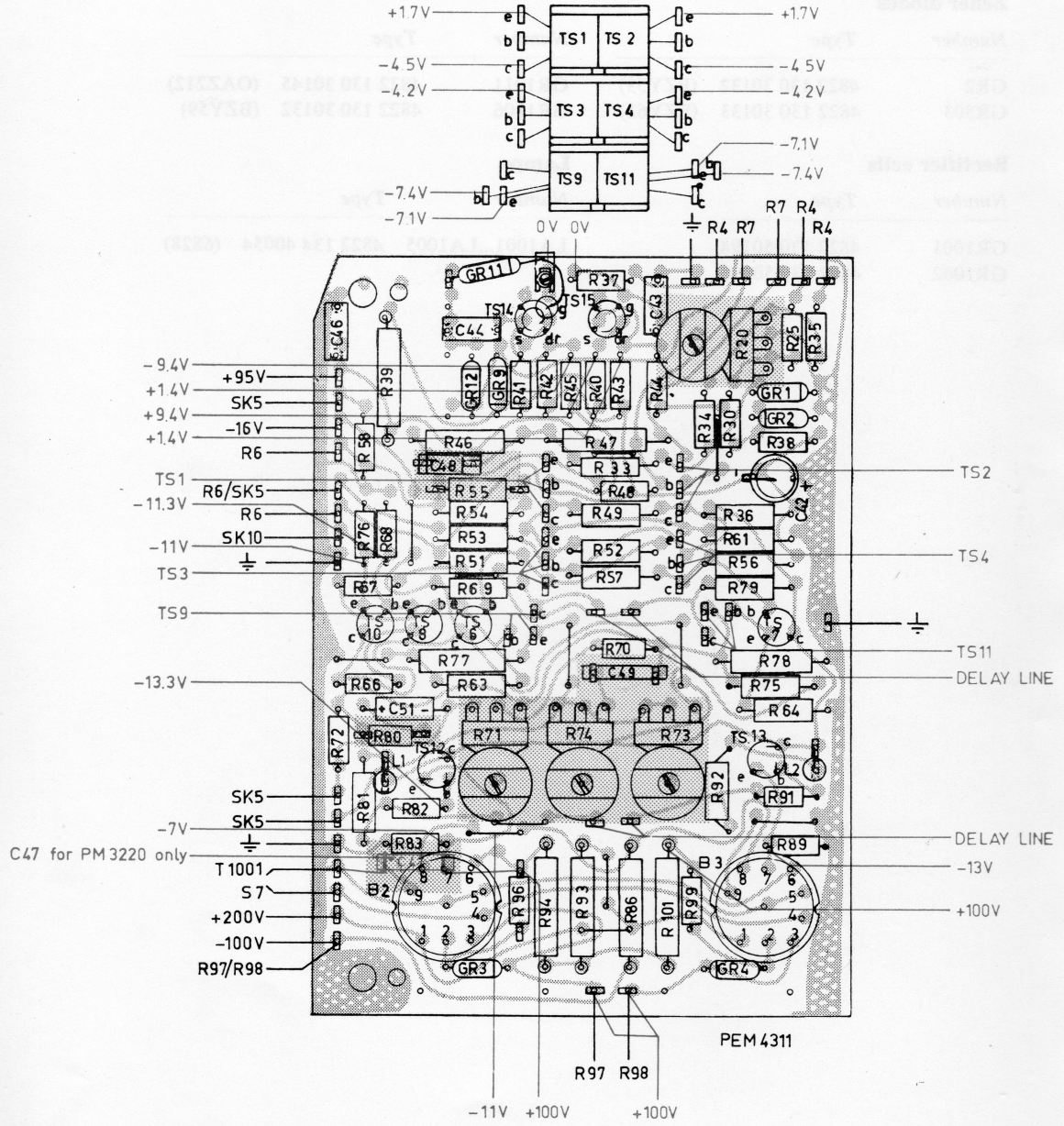

Fig. 19. Print plate U2, Y-amplifier

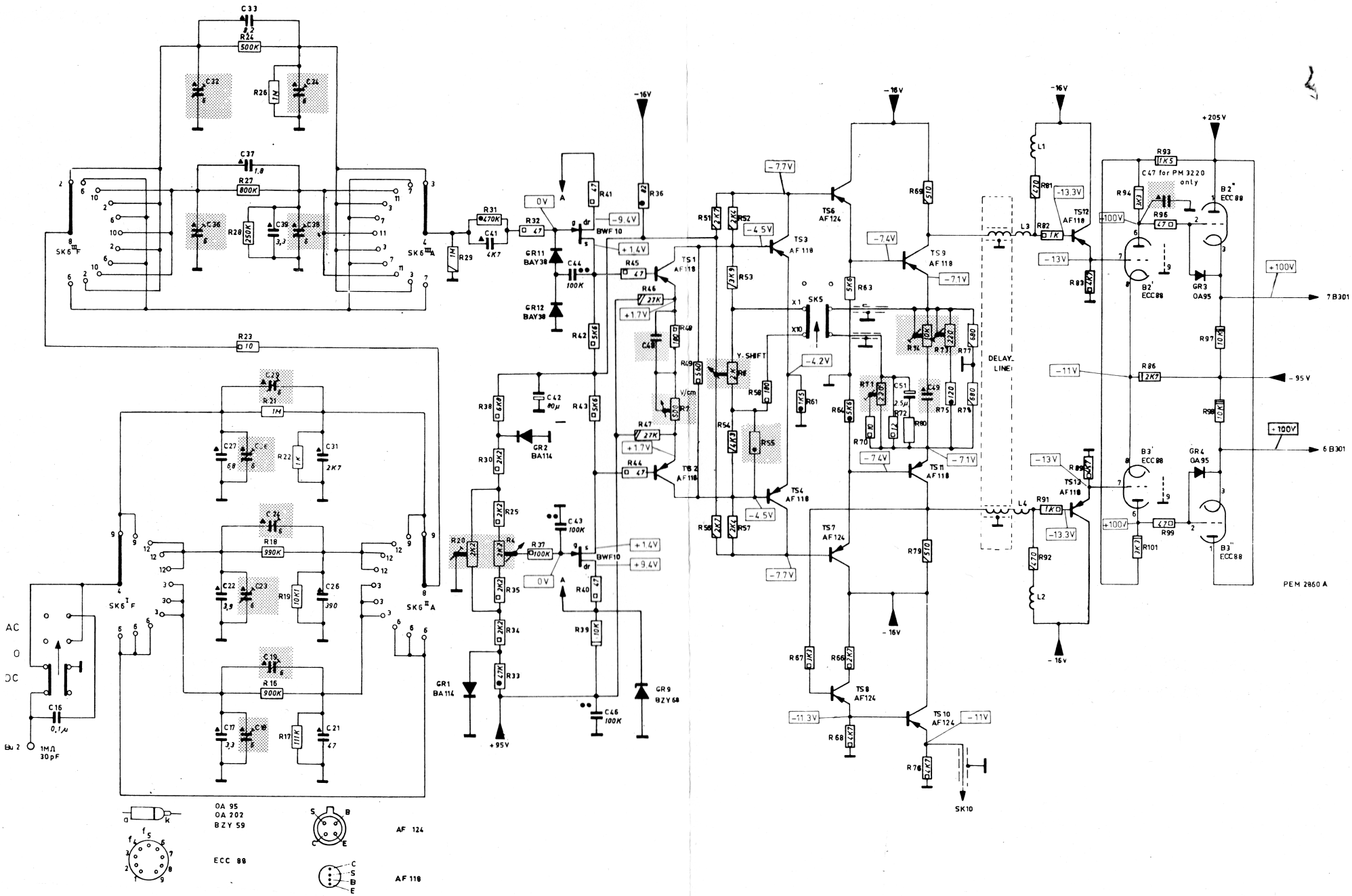

Fig. 20. Circuit diagram, Y-amplifier

CONTACTS ON THE FRONT SIDE OF THE WAFER

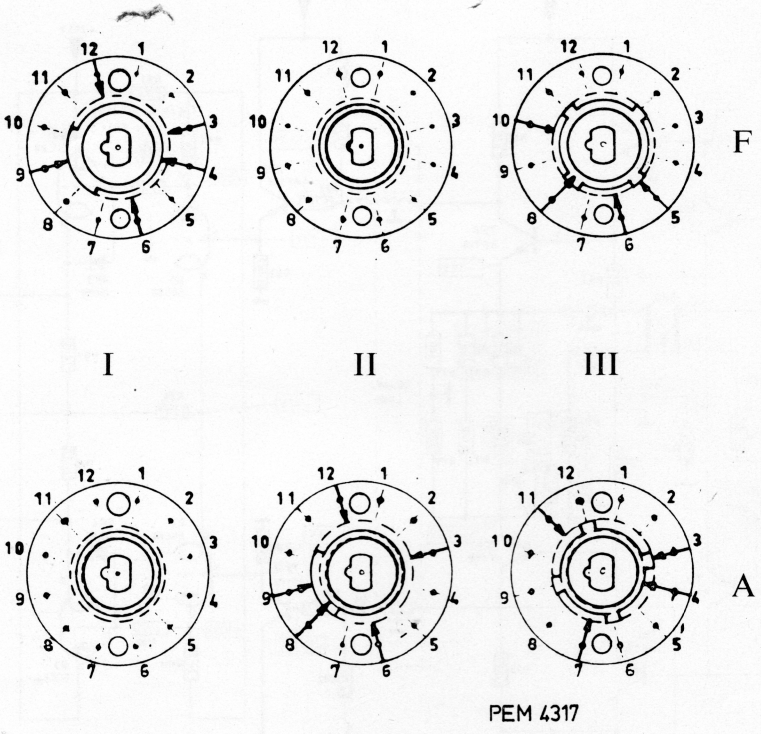

CONTACTS ON THE REAR SIDE OF THE WAFER SEEN FROM THE FRONT SIDE

Fig. 21. Switch wafers SK 6

CONTACTS ON THE FRONT SIDE OF THE WAFER

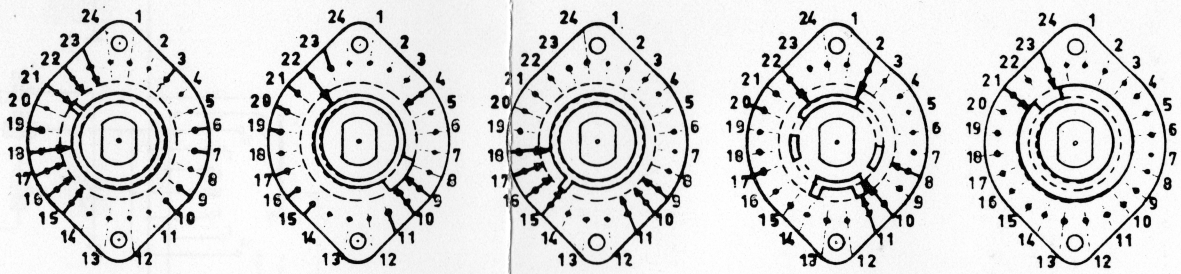

I II III IV V

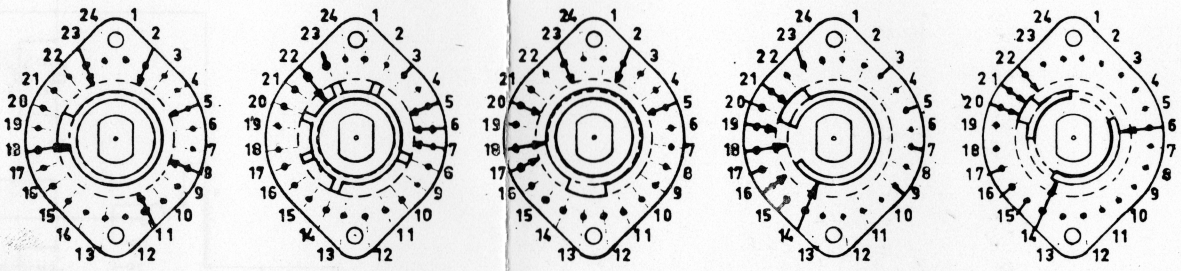

CONTACTS ON THE REAR SIDE OF THE WAFER,
SEEN FROM THE FRONT SIDE

Fig. 22. Switch wafers SK 7

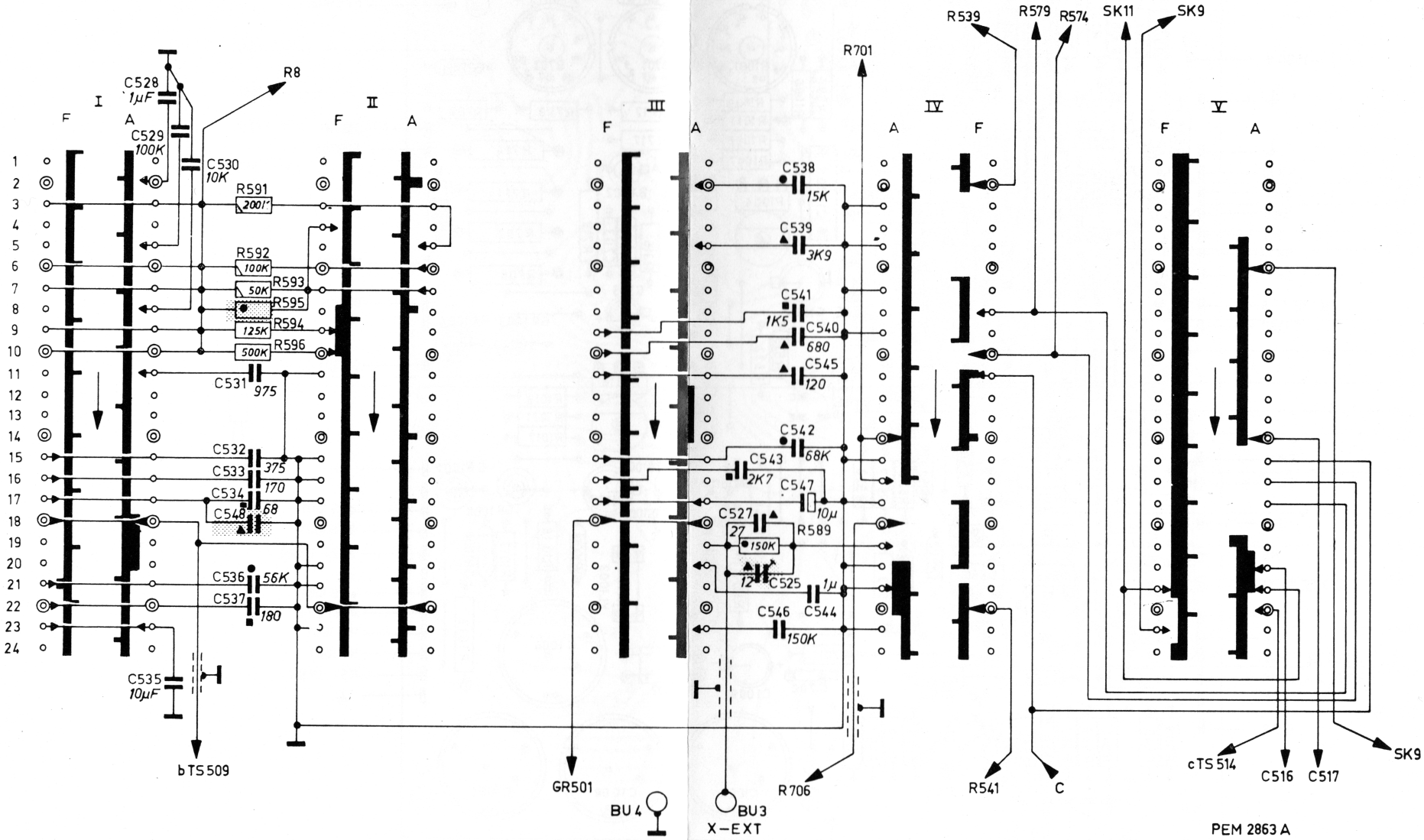

Fig. 23. Time-base switch

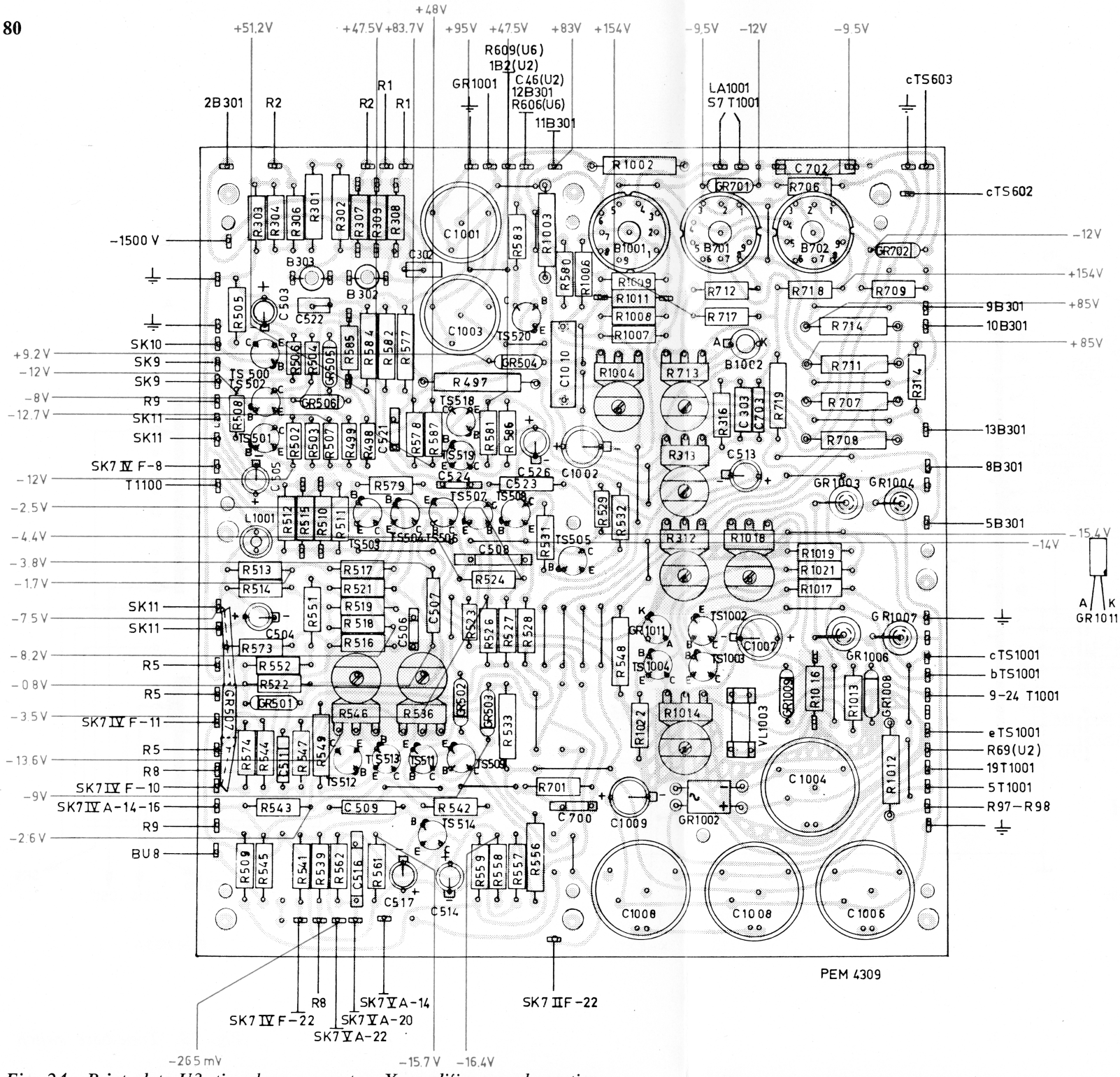

Fig. 24. Print plate U3, time-base generator, X-amplifier, supply section

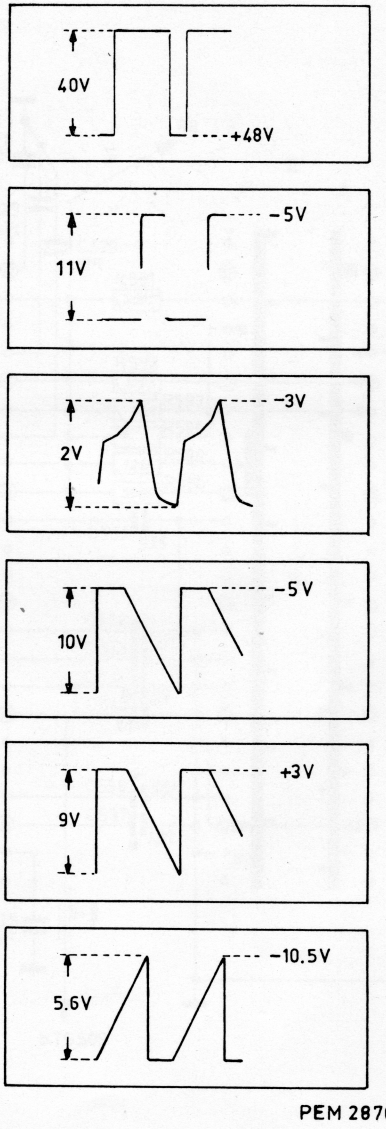

Fig. 25. Oscillograms

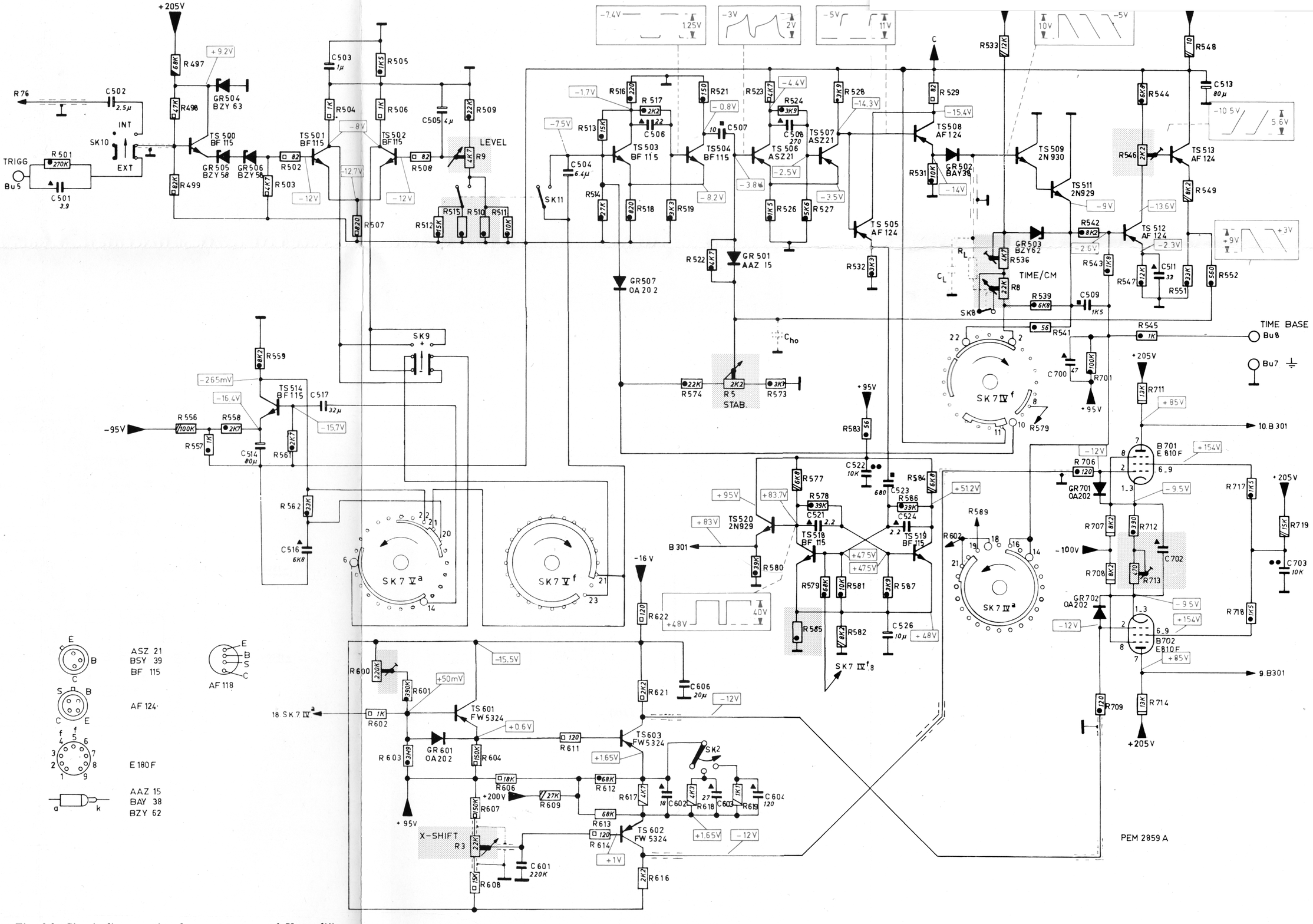

Fig. 26. Circuit diagram, time-base generator and X-amplifier

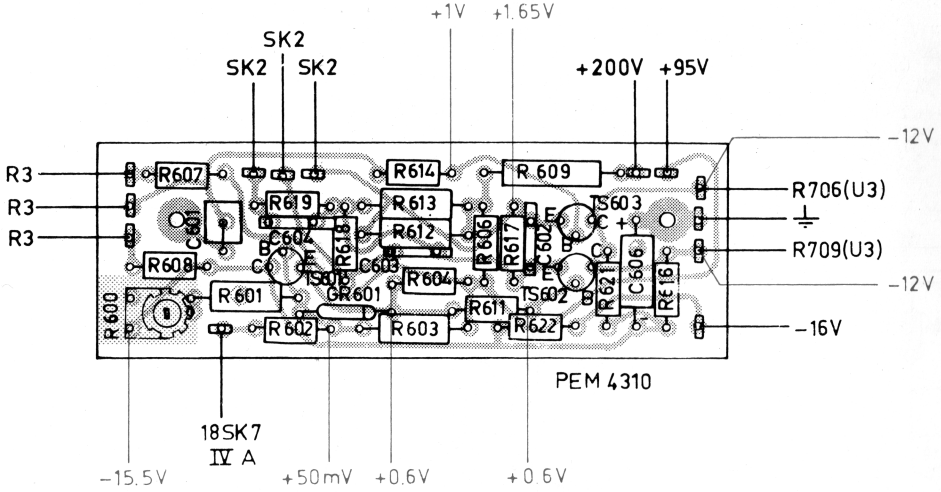

Fig. 27. Print plate U6, X-preamplifier

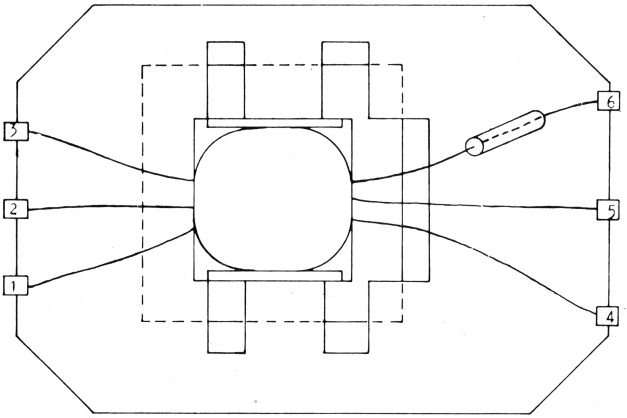

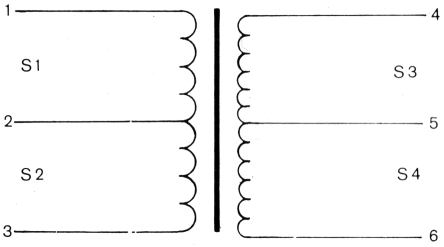

CODE	TURNS
S1	25
S2	25
S3	2400
S4	2400

Fig. 28. Transformer T 1100

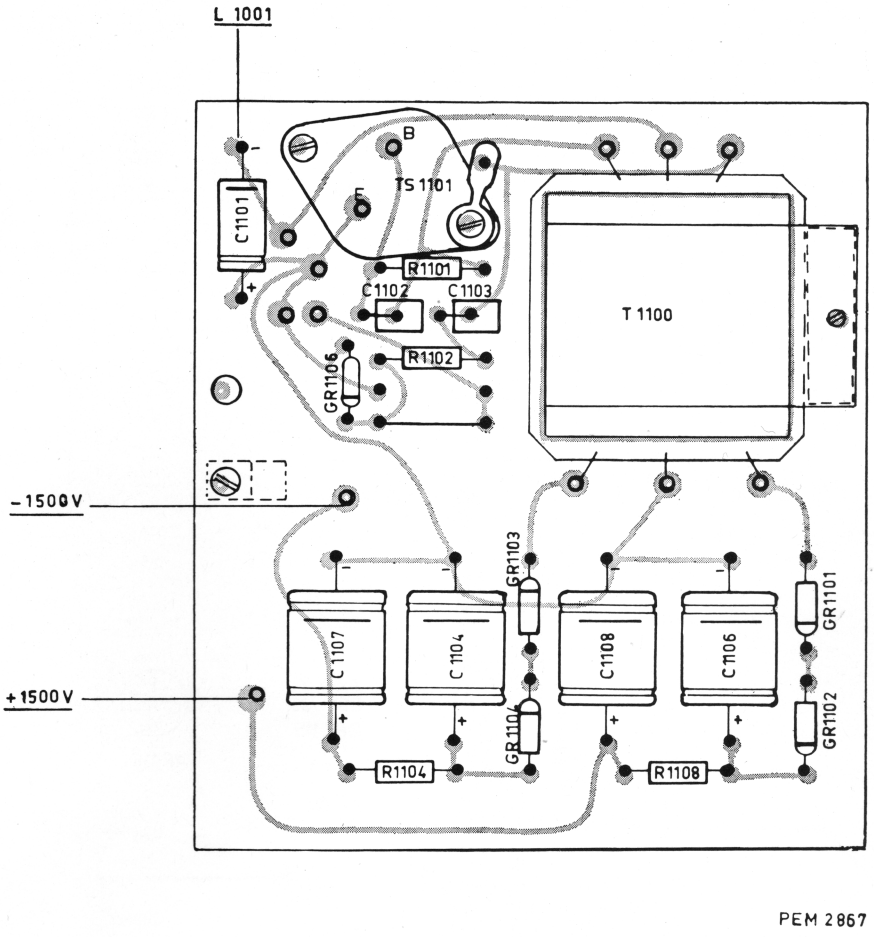

Fig. 29. Print plate U4, high voltage unit

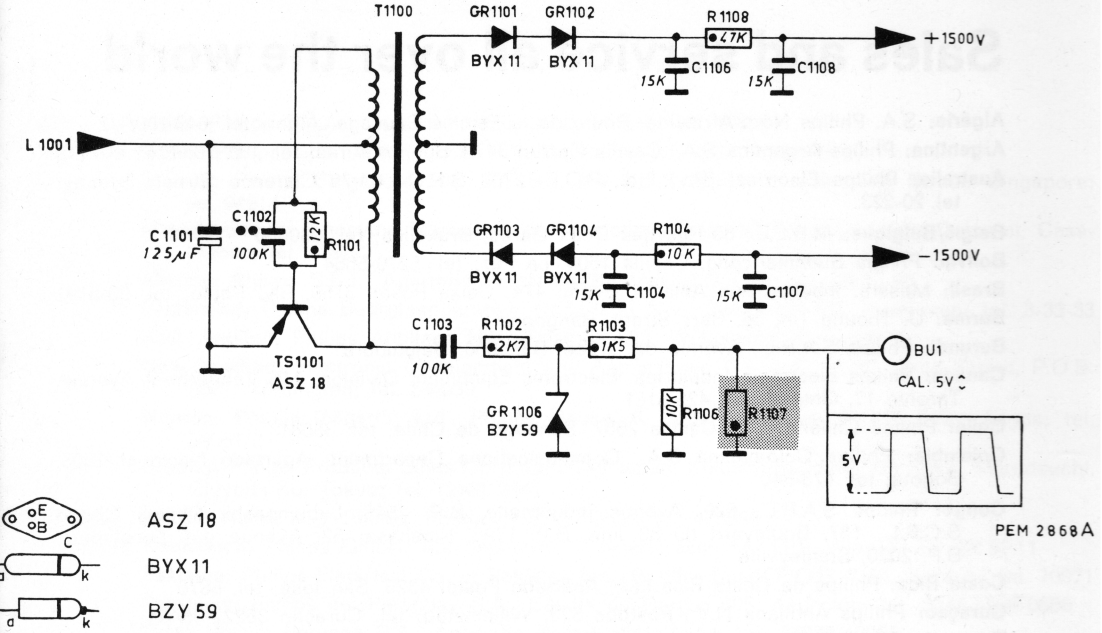

Fig. 30. Circuit diagram, high voltage unit

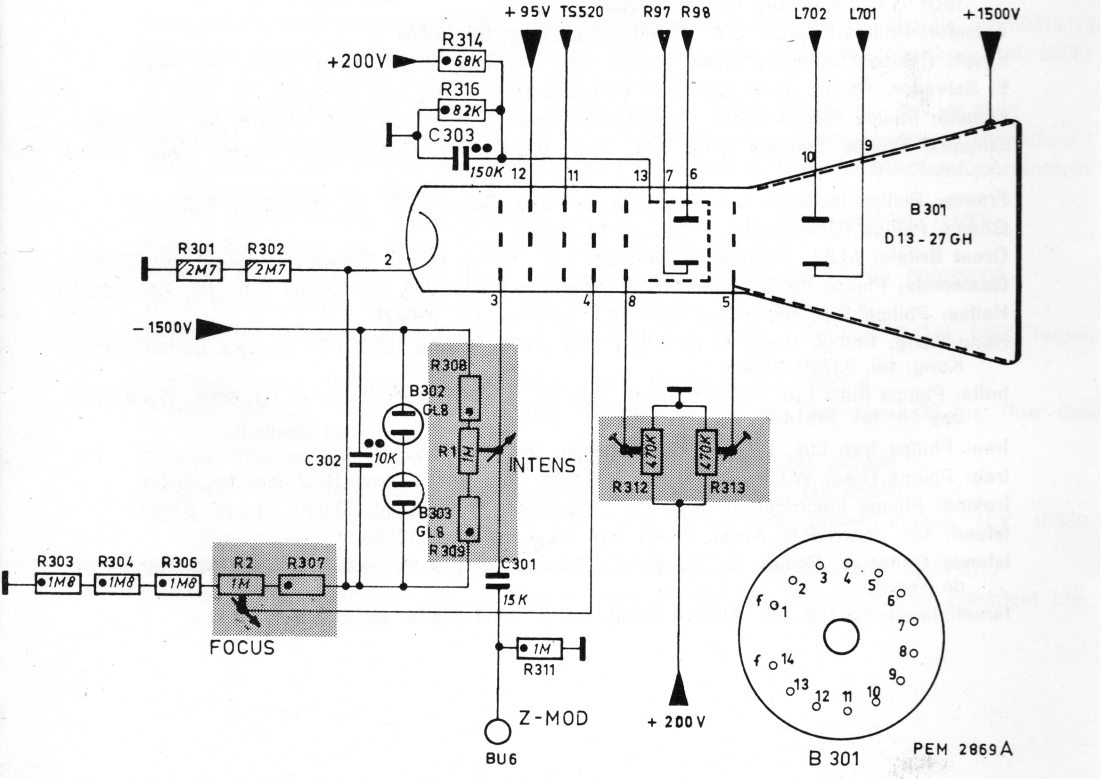

Fig. 31. Circuit diagram, CRT circuit

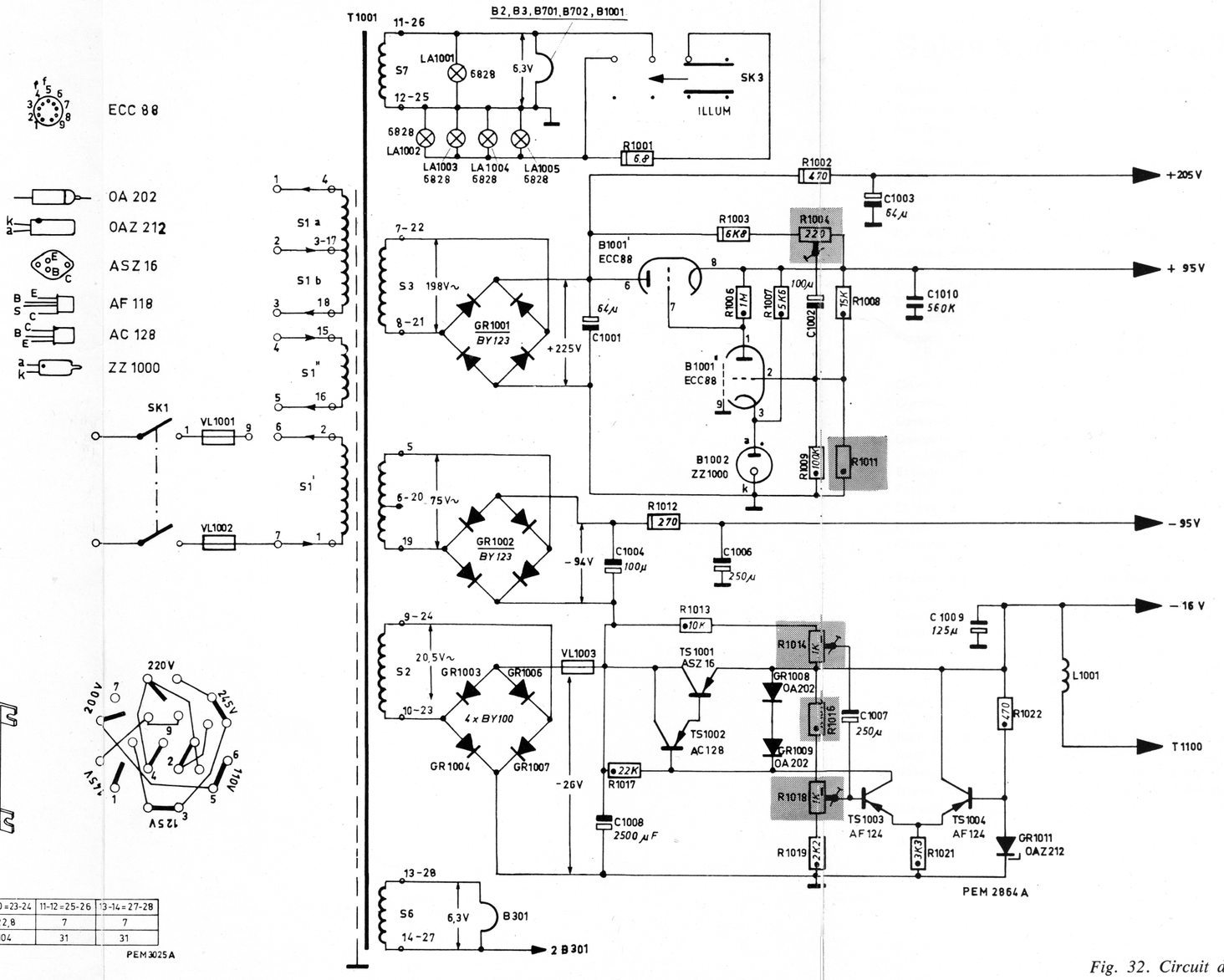

Code	1-2=15-16	3-4	17-18	7-8=21-22	5-6=19-20	9-10=23-24	11-12=25-26	13-14=27-28
Volts	110	15	20	219	44	22,8	7	7
Turns	500	68	86	1000	200	104	31	31

Fig. 32. Circuit diagram, supply section

Sales and service all over the world

Algérie: S.A. Philips Nord-Africaine, Route de la Femme Sauvage, Alger; tel. 647 200/1/2

Argentina: Philips Argentina S.A., Casilla Correo 3479, Buenos Aires; tel. T.E. 70, 7741 al 7749

Australia: Philips Electrical (Pty) Ltd., P.O.B. 2703 G.P.O., 69-79 Clarence Street, Sydney; tel. 20-223

België/Belgique: M.B.L.E., 80 Rue des Deux Gares, Bruxelles; tel. 230000

Bolivia: Philips Sudamericana, Casilla 1609, La Paz; tel. 5270-5664

Brasil: Messrs. Inbelsa, Rua Amador Bueno 474, Caixa Postal 3159, Sao Paulo; tel. 93-9191

Burma: U. Thoung Tin, 36, Barr Street, Rangoon

Burundi: Philips S.A.R.L., Avenue de Grèce, B.P. 900, Bujumbura

Canada: Philips Electronic Industries, Electronic Equipment Division, 116 Vanderhoof Avenue, Toronto 17, Ontario; tel. 425-5161

Chile: Philips Chiléna S.A., Casilla 2687, Santiago de Chile; tel. 35081

Colombia: Philips Colombiana S.A., Communications Department, Apartado Nacional 1505, Bogotá; tel. 473-640

Congo: Philips S.A.R.L., 620, Avenue Industrielle, B.P. 2546, Lubumbashi; Philips Congo S.C.R.L., 137, Boulevard du 30 Juin, B.P. 1798, Kinshasa; 52, Avenue des Eucalyptus, B.P. 2020, Stanleyville

Costa Rica: Philips de Costa Rica Ltd., Apartado Postal 4325, San José; tel. 5670

Curaçao: Philips Antillana N.V., Postbus 523, Willemstad; tel. Curaçao 36222-35464

Danmark: Philips A.S., Prags Boulevard 80, København; tel. Asta 2222

Deutschland (Bundesrepublik): Philips Industrie Elektronik GmbH, Röntgenstrasse 22, Postfach 111, 2 Hamburg 63; tel. 501031

Ecuador: Philips Ecuador S.A., Casilla 343, Quito; tel. 30064

Egypt: Resident delegate office, P.O.B. 1687, 43 Kasr El Nil Street, Cairo; tel. 74933

El Salvador: Philips de El Salvador, Apartado Postal 865, San Salvador; tel. 7441

España: Philips Ibérica S.A.E., Avenida de America, Apartado 2065, Madrid; tel. 246 22 00

Ethiopia: Philips Ethiopia (Priv. Ltd., Co), P.O.B. 659, Cunningham Street, Addis Abeba; tel. 13440

France: Philips Industrie S.A., 105 Rue de Paris, Bobigny 93; tel. 845 28-55, 845 27-09

Ghana: Philips (Ghana) Ltd., P.O.B. M 14, Accra

Great Britain: M.E.L. Equipment Company Ltd., Manor Royal, Crawley (Sussex); tel. 28787

Guatemala: Philips de Guatemala S.A., Apartado Postal 238, Guatemala City; tel. 20607-08-09

Hellas: Philips S.A. Hellénique, B.P. 153, Athènes; tel. 230476

Hong Kong: Philips Hong Kong Ltd., P.O.B. 2108, Rooms 1006/1008 Prince's Building, Hong Kong; tel. 33728, 28548

India: Philips India Ltd., PIT/S.E. Dept., 254, Dr. Annie Besant Road, P.O.B. 6598, Worli, Bombay 18; tel. 245144

Iran: Philips Iran Ltd., P.O.B. 1297, Teheran; tel. 48344-68344

Iraq: Philips (Iraq) W.L.L., P.O.B. 5749, South Gate Post Office, Baghdad; tel. 98844

Ireland: Philips Electrical (Ireland) Ltd., Newstead, Clonskeagh, Dublin 14; tel. 976611

Island: Mr. Snorri P.B. Arnar, P.O.B. 354, Reykjavik; tel. 13869

Islands Canarias: Philips Ibérica S.A.E., Triana 132, Las Palmas; Castilla 39-41 Santa Cruz de Tenerife.

Israël: Isralectra Ltd., 12, Allenby Road, P.O.B. 1608, Haifa; tel. 526231

Italia: Philips S.p.A., Casella Postale 3992, Milano; tel. 69.94

Liban: Philips Liban S.A., P.O.B. 670, Beyrouth; tel. 232303-232458/59

Malaya: Philips Singapore Ltd., P.O.B. 1358 N.T.S. Building, d'Almeida Street, Singapore; tel. 94914

Maroc: Société Anonyme Marocaine de Télécommunications, Place Lemaigre Dubreuil, Casablanca; tel. 439-92

Mexico: Philips S.E.T., Apartado Postal 24420, Mexico 7 D.F.; tel. 25-15-40

Nederland: Philips Bedrijfsapparatuur Nederland N.V., Boschdijk VB, Eindhoven; tel. 3-33-33

Ned. Antillen: Philips Antillana N.V., Postbus 523, Willemstad, Curaçao

New Zealand: Electronic Development and Applications Co. Ltd., 18-20 Lorne Street, P.O.B. 2097, Wellington; tel. 54-039

Nigeria: Philips (Nigeria) Ltd., Philips House, 6, Ijora Causeway, P.O.B. 1921, Lagos; tel. 56051/2

Nippon: Philips Products Sales Corporation of Japan, Kokusai Building, 7th Floor, Marunouchi, Chiyoda-Ku, Tokyo; tel. (216) 2441

Norge: Norsk A.S. Philips, Postboks 5040, Oslo; tel. 463890

Österreich: Philips GmbH, Abt. Industrie, Triesterstrasse 64, 1101 Wien X; tel. 64 55 11

Pakistan: Philips Electrical Co. of Pakistan Ltd., Bunder Road, P.O.B. 7101, Karachi; tel. 70071

Paraguay: Philips del Paraguay S.A., Casilla de Correo 605, Asunción; tel. 8045-5536-6666

Perú: Philips Peruana S.A., Apartado Postal 1841, Lima; tel. 34620-40265

Philippines: Electronic Development & Application Center, Room 715, Don Santiago Bld., 1344 Taft Avenue, Manila

Portugal: Philips Portuguesa S.A.R.L., Rua Joaquim Antonio d'Aquiar 66, Lisboa; tel. 683121/9

Rhodesia: Philips Rhodesian (Private) Ltd., P.O.B. 994, Gordon Avenue, Salisbury; tel. 29081

Rwanda: Philips Rwanda S.A.R.L., B.P. 449, Kigali

Schweiz-Suisse-Svizzera: Philips A.G., Binzstrasse 18, 8027 Zürich; tel. 051 44 22 11

Singapore: Philips Singapore Ltd., P.O.B. 1358, N.T.S. Building, d'Almeida Street, Singapore 1

South Africa: South African Philips (Pty) Ltd., P.O.B. 7703, 2, Herb Street, New Doornfontein, Johannesburg; tel. 24-0531

Sudan: Gellatly Hankey & Co. (Engineering) Ltd., P.O.B. 150, Khartoum; tel. 71183

Suomi: Oy Philips Ab, Frederikinkatu 48, Helsinki; tel. 10915

Sverige: Svenska A.B. Philips, Fack, Lidingövägen 50, Stockholm 27; tel. 08/635000

Syrie: Philips Moyen Orient S.A., P.O.B. 2442, Damas; tel. 18605-21650

Taiwan: Yung Kang Trading Co. Ltd., 6 Nan King East Road, 1 Section, P.O.B. 1467, Taipei; tel. 43540

Thailand: Philips Thailand Ltd., 283 Silom Road, Bangkok; tel. 36985-8

Tunisie: Société Tunisienne d'Industrie Electronique et de Télévision, 32 bis Rue Ben Ghedhahem, Tunis

Türkiye: Türk Philips Ticaret A.S., Posta Kutusu 504, Istanbul; tel. 447486

Uruguay: Philips de Uruguay, Avda Uruguay 1287, Montevideo; tel. 956 41-2-3-4

U.S.A.: Philips Electronic Instruments, 750 South Fulton Ave., Mount Vernon, N.Y. 10550-(914) 664-4500

Venezuela: C.A. Philips Venezolana, Apartado Postal 1167, Caracas; tel. 72 01 51

Zambia: Philips Electrical Ltd., Freetown Road, P.O.B. 553, Kitwe; Philips Electrical Ltd., P.O.B. 1878, Lusaka